SHIFT LOCK
SHIFT KEY
SYSTEM

21327

Booklet available in English on
Heft in deutscher Sprache erhältlich auf
Livret disponible en français sur
Libretto disponibile in Italiano su
Folleto disponible en español en
如需中文版手册，请访问

Creative writing and classic design

Indulge in your passions for the art of creative writing and classic design as you build, then find that special place for your LEGO® typewriter. Thomas Kirk Kristiansen, Chairman of the LEGO Group and representative of the fourth generation of the owner family, saw this set as a fun opportunity to write a letter to the dedicated LEGO Ideas fans – you! The letter is printed in 43 different languages in the enclosed booklet. Find one you would like to display in your LEGO typewriter, and carefully tear it from the booklet.

> "I hope this classic typewriter will bring back fond memories – or make you feel like a cool 1950s reporter/bestselling author."

Thomas Kirk Kristiansen

An epitome of the modern revolution

The classic typewriter was an invaluable instrument for businesses all over the world, as it was for Ole Kirk Kristiansen (shown here) and his life's work in the LEGO Group. Iconic authors created some of the world's most beloved modern literature on theirs. Investigative reporters put their reputation at stake to unravel the truth, and friends and loved ones poured their hearts out over the keys. It is an icon of the modern revolution.

Invented in 1874, the first commercial typewriters took a decade to break into mainstream culture. For almost a hundred years, they were found in most offices and homes, replacing handwritten records and setting new standards for correspondence. Some adult fans may remember taking touch typing lessons in school when a high words-per-minute count was considered a coveted skill on their CV. The smell of the oiled inner metal workings, the gratifying feeling of a perfect, typo-free document, or getting your hands smudged with ink when changing the ribbon.

Younger fans have been raised with computers and electronic keyboard typing as second nature. While functionality has developed significantly, the keyboard layout itself still remains largely unchanged. From your laptop to phone and tablet touch screens used on Earth and even by astronauts in space – the next time you use your QWERTY keyboard, think of the development it's gone through to this day. Who knows where it may go next?

Ole Kirk Kristiansen

Erika
SMITH CORONA
CLASSIC 12

Meet the man behind the keys

Steve Guinness from Chester, UK is a life-long LEGO® fan and schoolteacher of Design and Technology, who has turned his passion for creativity and LEGO bricks into a dream job.

"I now teach part time and also have my own business making bespoke LEGO models and running LEGO workshops for local schools, libraries and museums. I have been interested in LEGO building since I was a young child. It's a fantastic system and I'm passionate about showing other adults it's not just a kids' toy, it's something people of all ages can enjoy."

A great type of challenge

Steve loves classic, manual typewriters and wanted to see how far he could take a LEGO version of one.

"I bought a vintage typewriter for research and started playing with bricks and mechanisms. The first version took about two weeks to complete and then I spent weeks revising and improving it in seven different versions."

"The keyboard layout was a challenge. I tested a number of different techniques and when I reduced the size of the typewriter, it all came together. I love the mechanical design and the hand crank with its realistic movement and signature clicking sound of a real typewriter. Thanks to everyone who helped make this model come to life. I hope it will bring nostalgia to adult fans like me and wonder and curiosity to younger fans who might never have seen a real typewriter!"

The LEGO® Ideas newshounds

LEGO® Ideas designers James May, Wes Talbott and Martin Fink immediately donned their retro thinking caps when Steve's model landed on their desks. The opportunity to investigate and experiment with classic vintage technology and new LEGO building techniques was simply an irresistible combination.

"I loved how the original model looked so realistic. We wanted to build on it by developing a rotating platen, which now means real paper can actually feed through it! I hope fans will love the abundance of features and functions like this we packed into the model."
– James May, LEGO Model Designer

"Steve's attention to detail is just remarkable. We included aesthetics into the model that any fan of typewriters would expect to see, like the lever to change the ink colour and manufacturer's label. The escapement where all the key arms connect with the metallic tiles, and how the textile ribbon fits behind it, is the main focal point for the model."
– Wes Talbott, LEGO Design Master

"We had fun experimenting with different graphic designs for the keys and the manufacturer's name on the back. We went through a series of different styles, shapes and forms before we landed on this 1950s-inspired look and feel. And, of course, with an iconic LEGO identity."
– Martin Fink, LEGO Graphic Designer

James May · Wes Talbott
Martin Fink

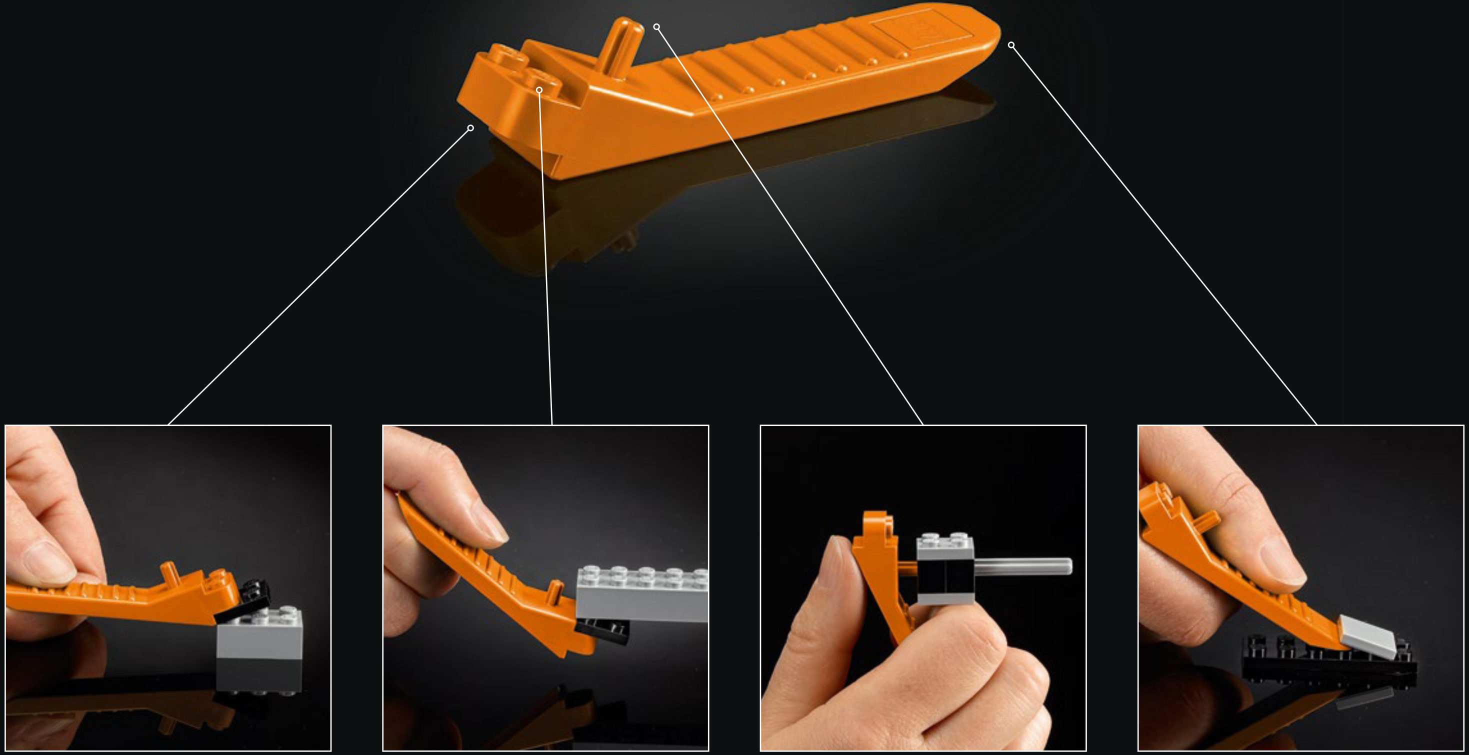

LEGO.com/brickseparator

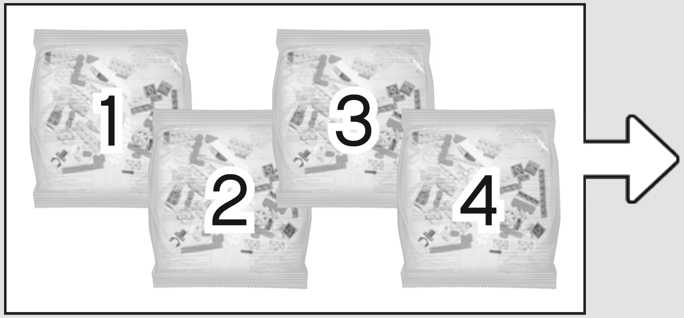
1
2
3
4

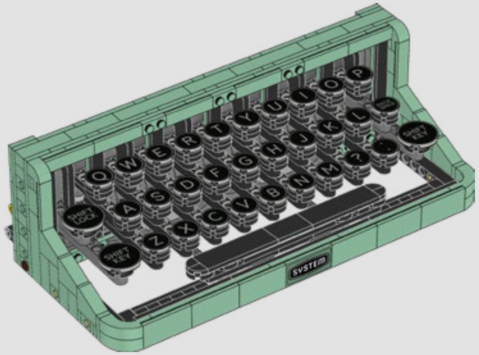

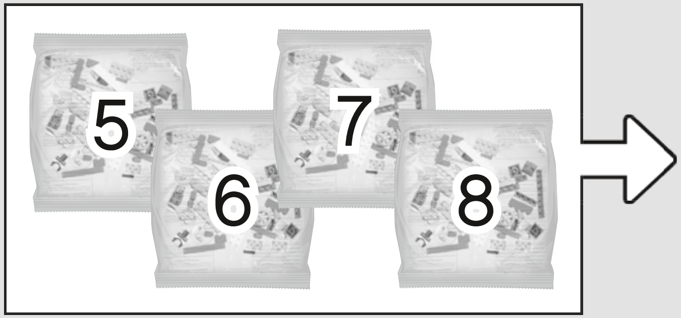
5
6
7
8

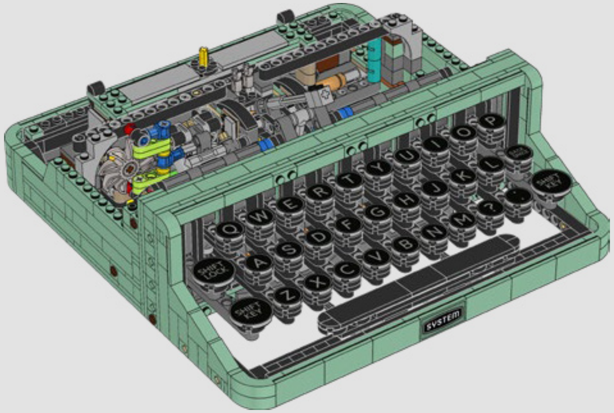

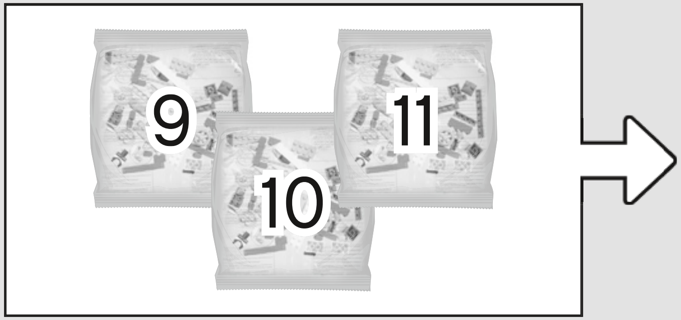
9
10
11

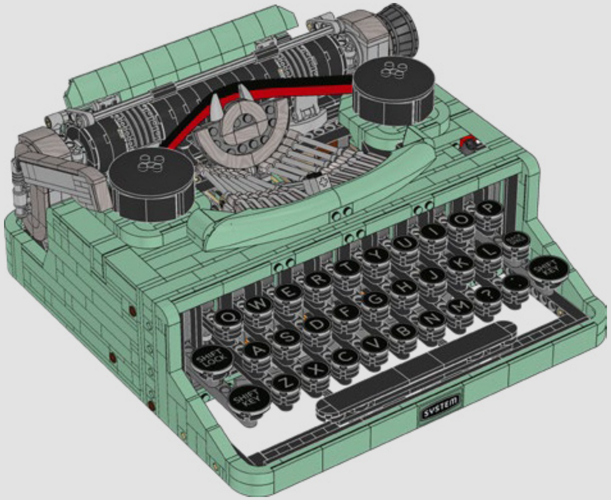

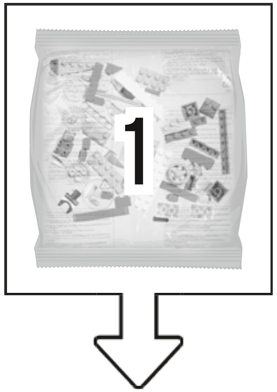

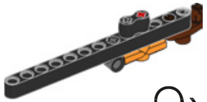
9x

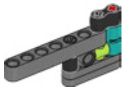
1x

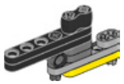
9x

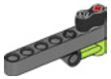
1x

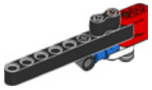
9x

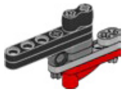
1x

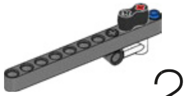
2x

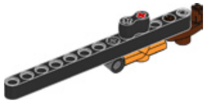
9x

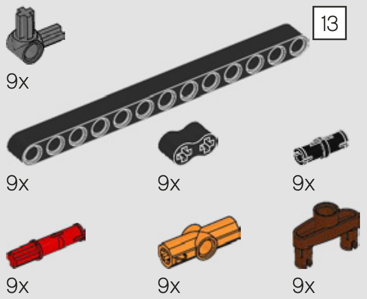
13
9x
9x
9x
9x
9x
9x
9x

1

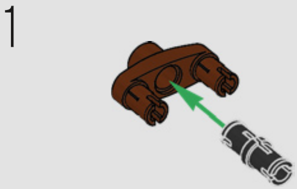

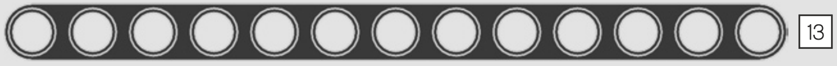

1:1

2

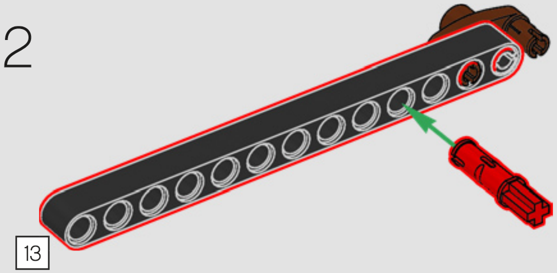

3

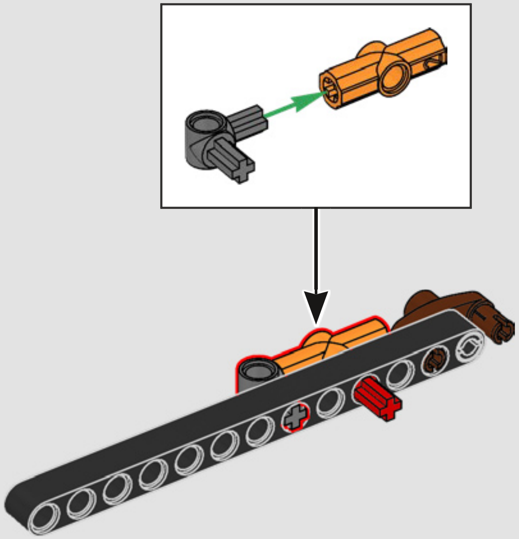

4

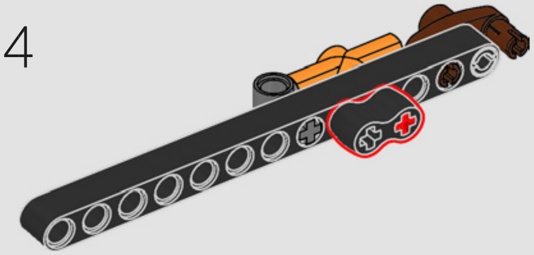

9x

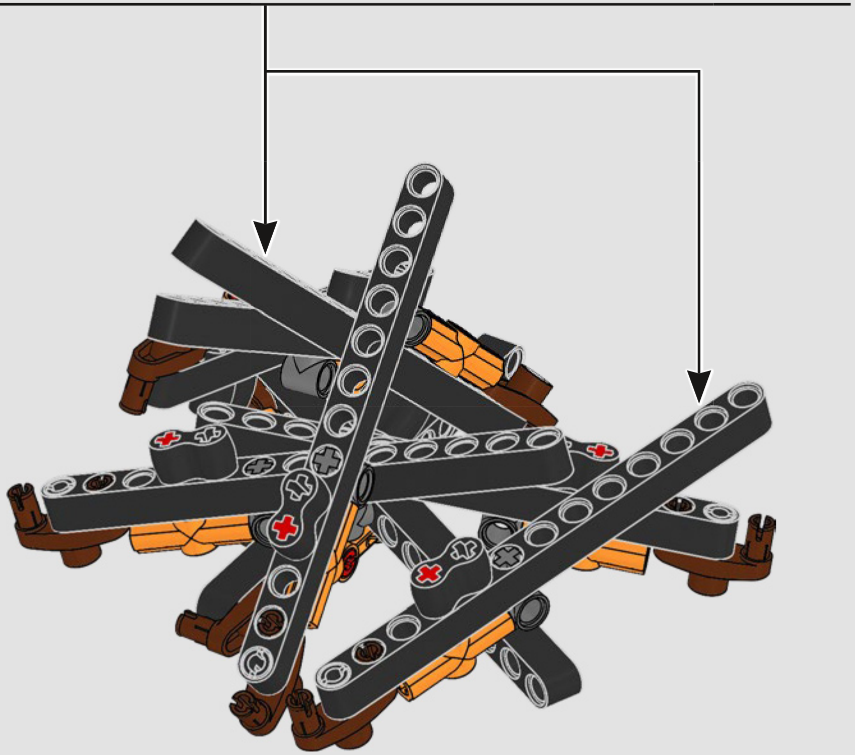

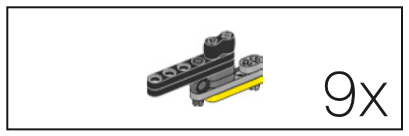

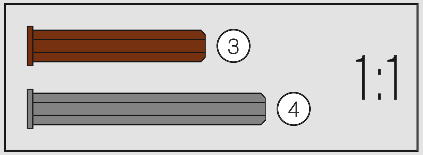

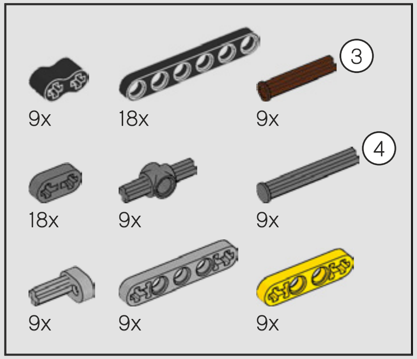
9x
18x
③
9x
18x
9x
④
9x
9x
9x
9x

2

1

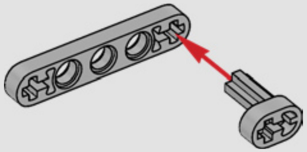

2

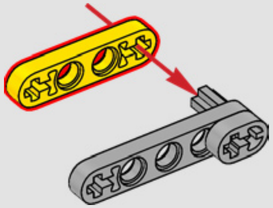

3

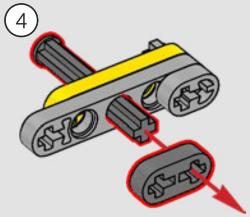

4

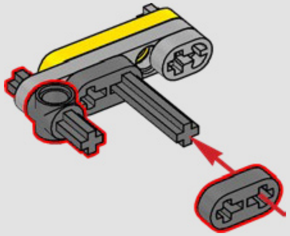

5

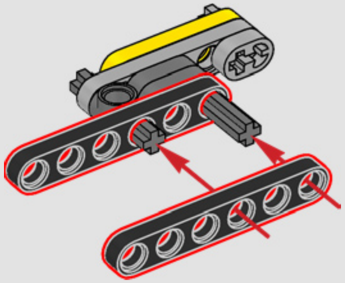

6

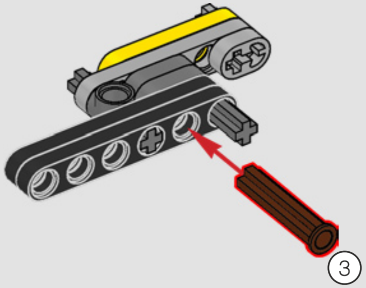

7

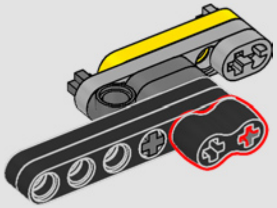

9x

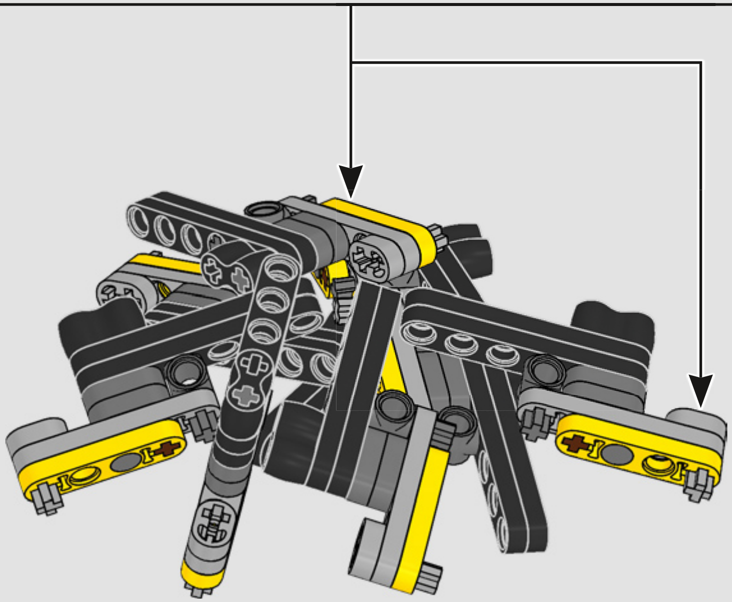

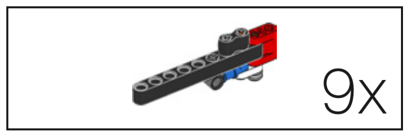

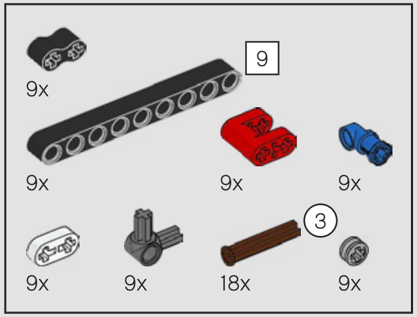
9x
9
9x
9x
9x
9x
9x
3
18x
9x

3

1

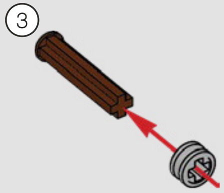

2

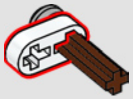

3

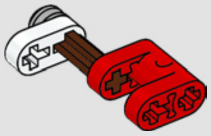

4

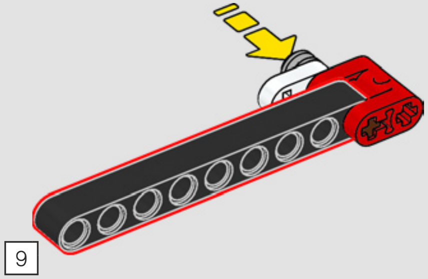

5

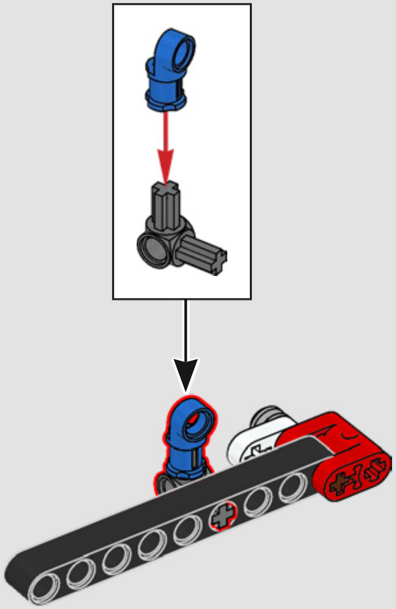

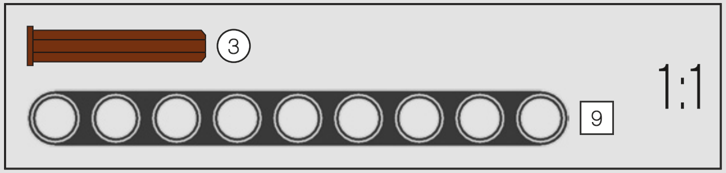

6

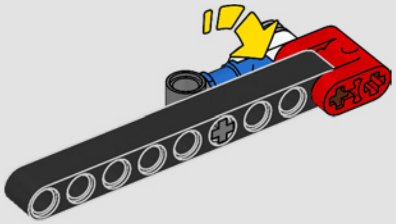

7

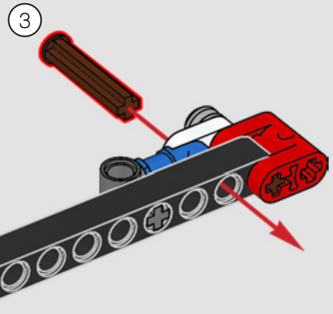

8

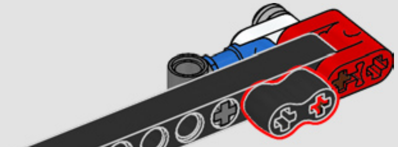

9x

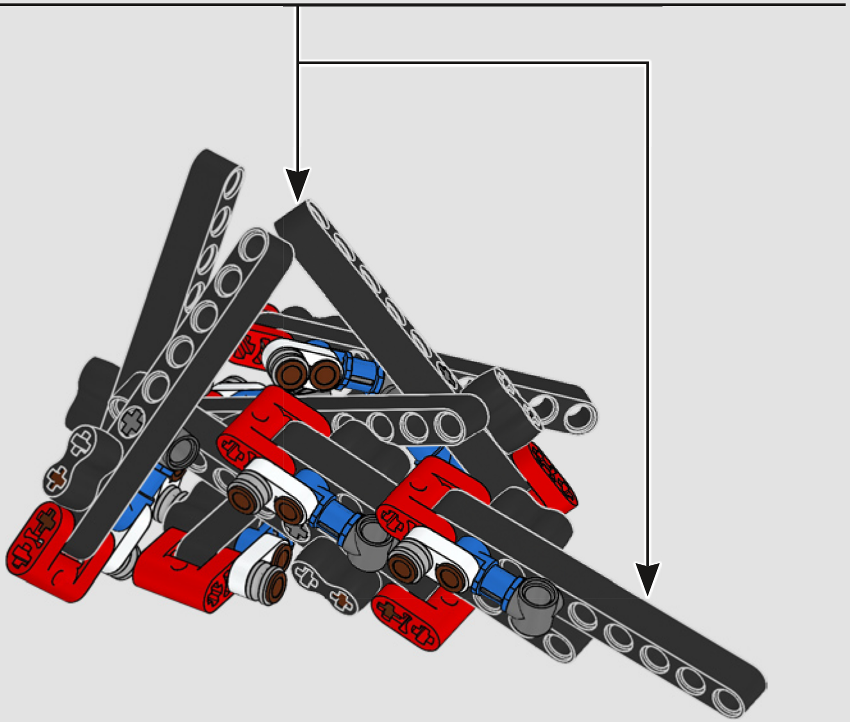

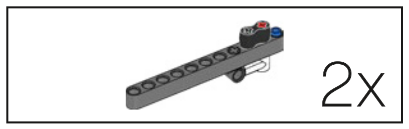

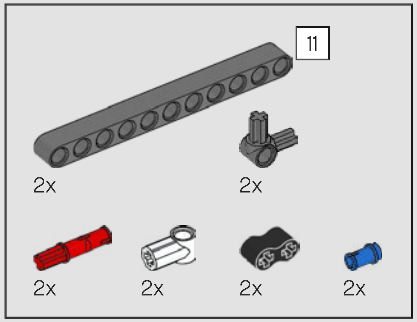
11
2x
2x
2x
2x
2x
2x

4

1

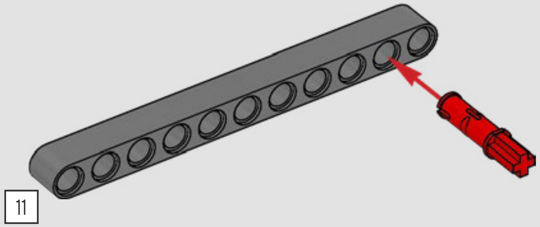

2

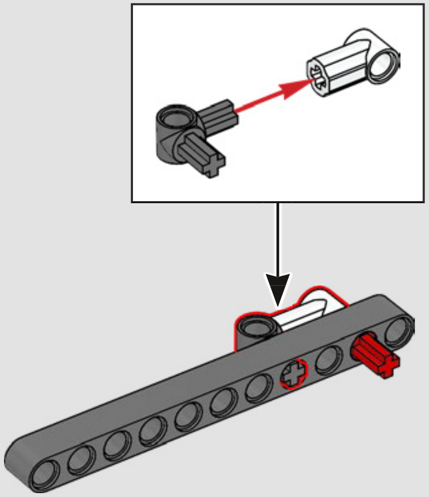

3

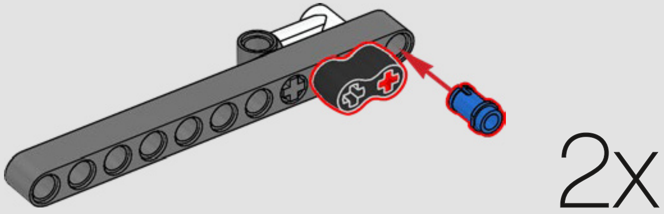

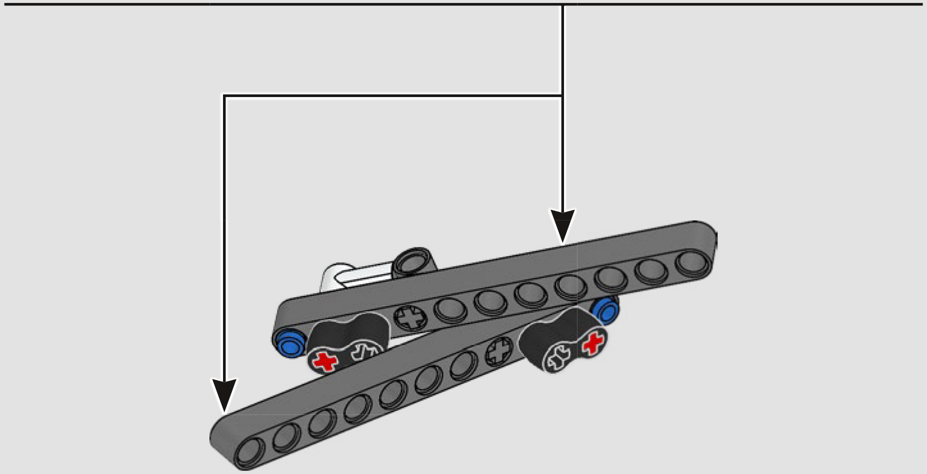

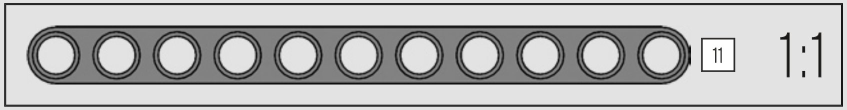

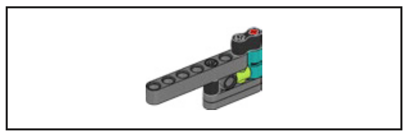

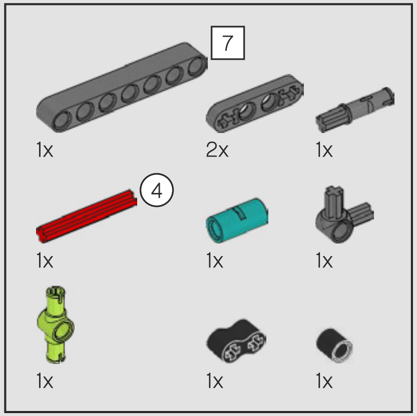
7
1x
2x
1x
4
1x
1x
1x
1x
1x
1x

5

1

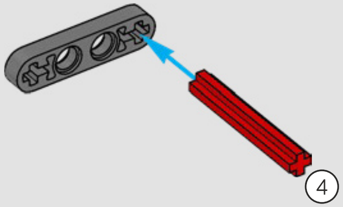

2

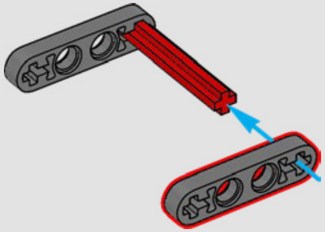

3

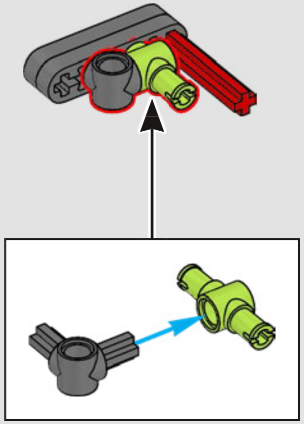

4

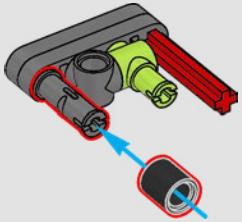

5

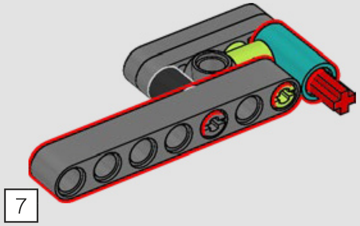

6

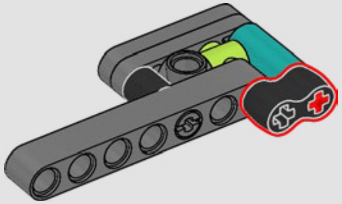

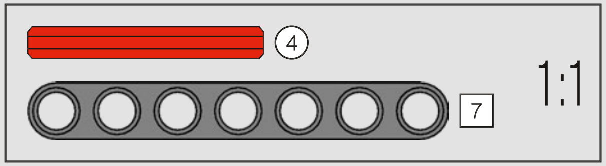

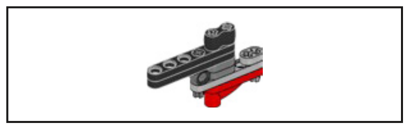

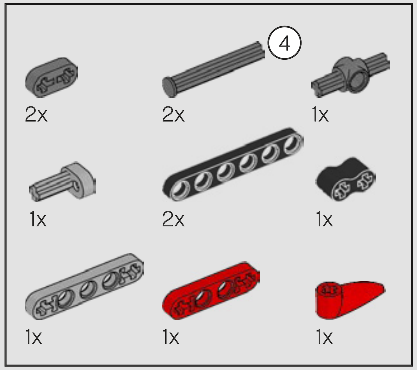
④
2x
2x
1x
1x
2x
1x
1x
1x
1x

6

1

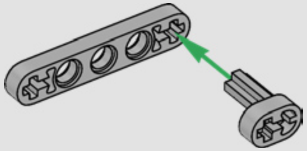

2

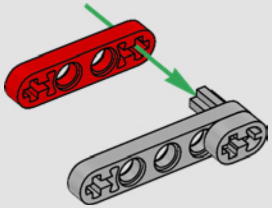

3

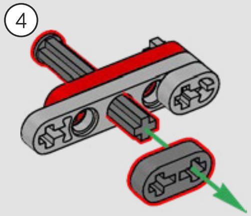

4

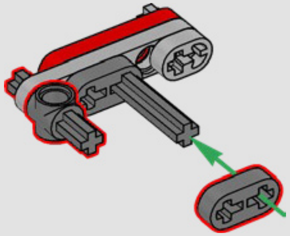

5

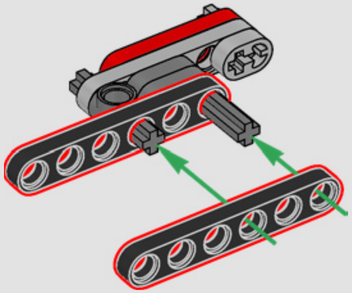

6

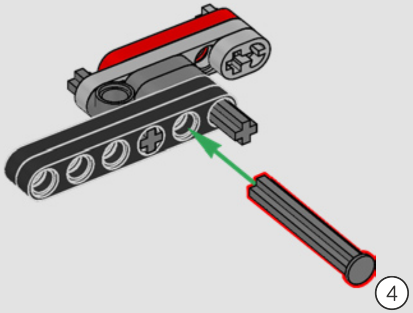

7

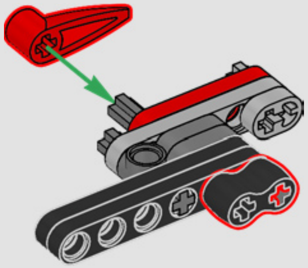

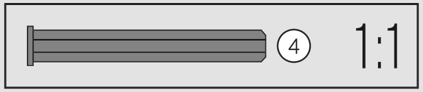

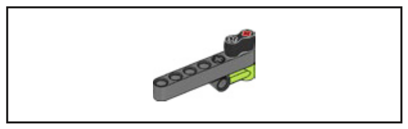

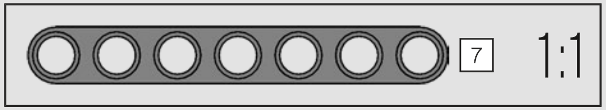

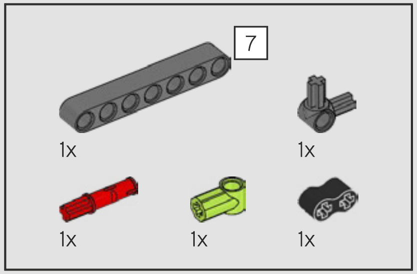
7
1x
1x
1x
1x
1x

7

1

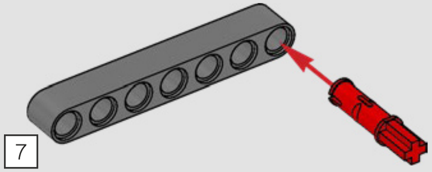

2

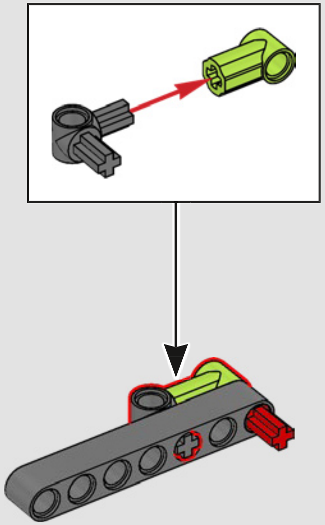

3

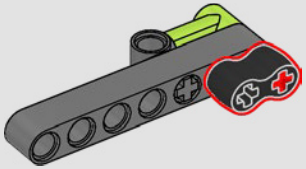

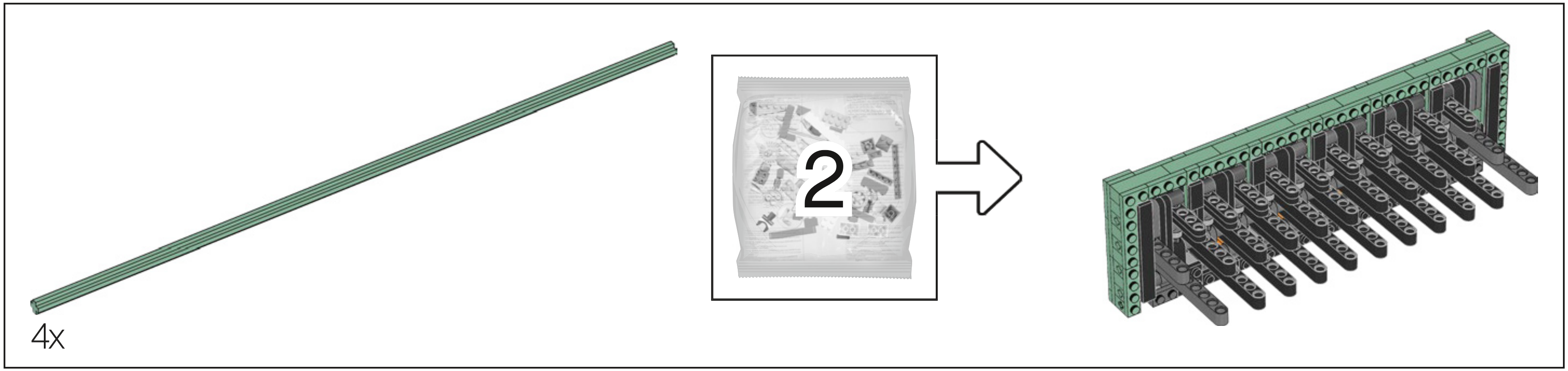

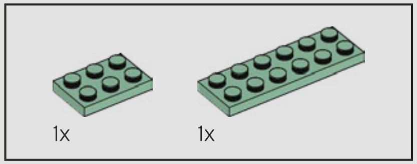

8

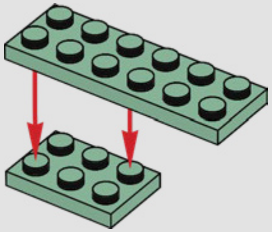

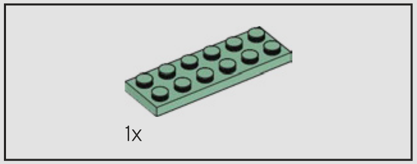

9

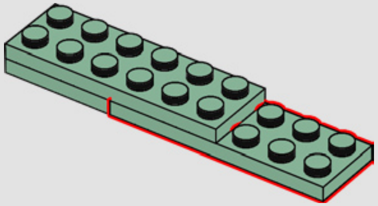

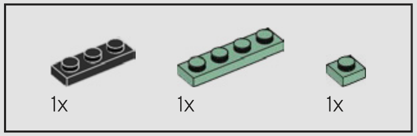

10

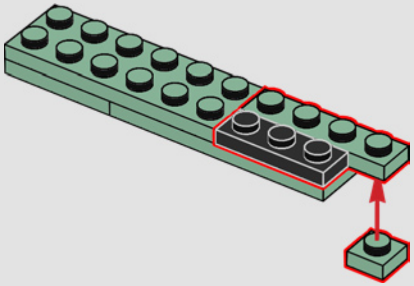

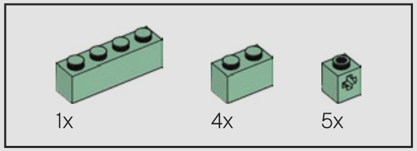

11

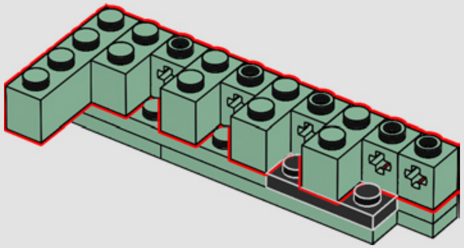

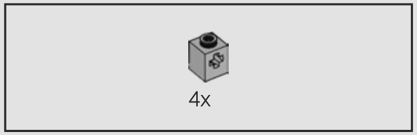

12

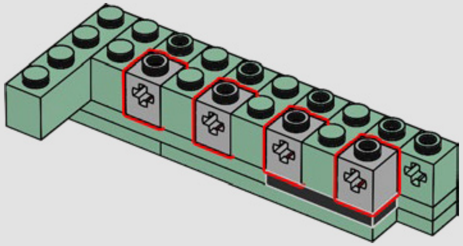

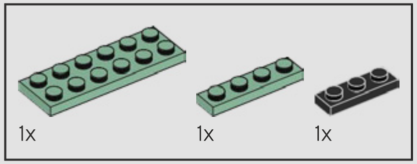

13

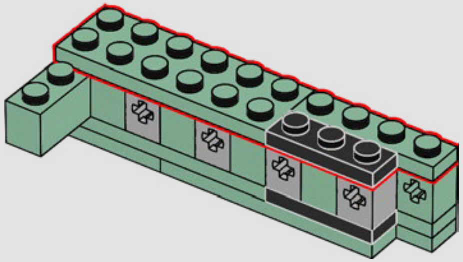

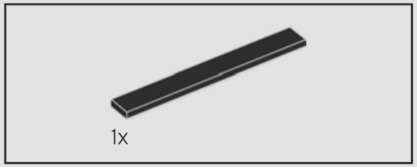

14

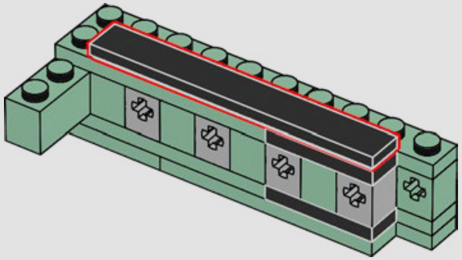

15

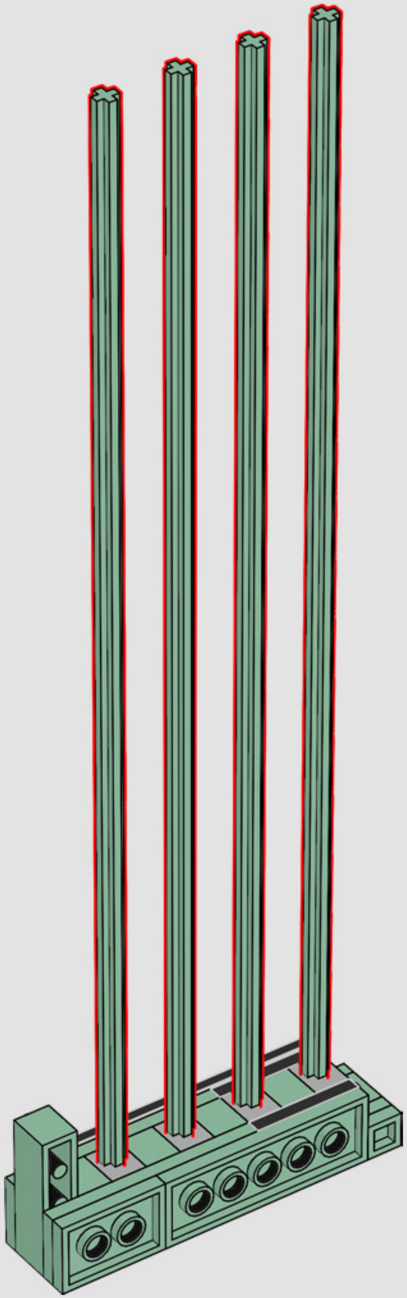

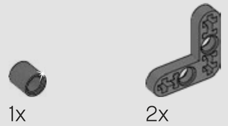

16

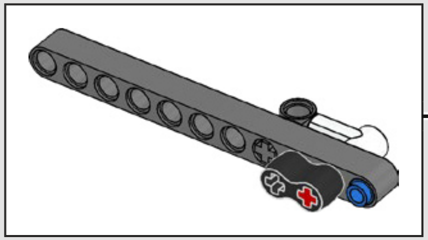

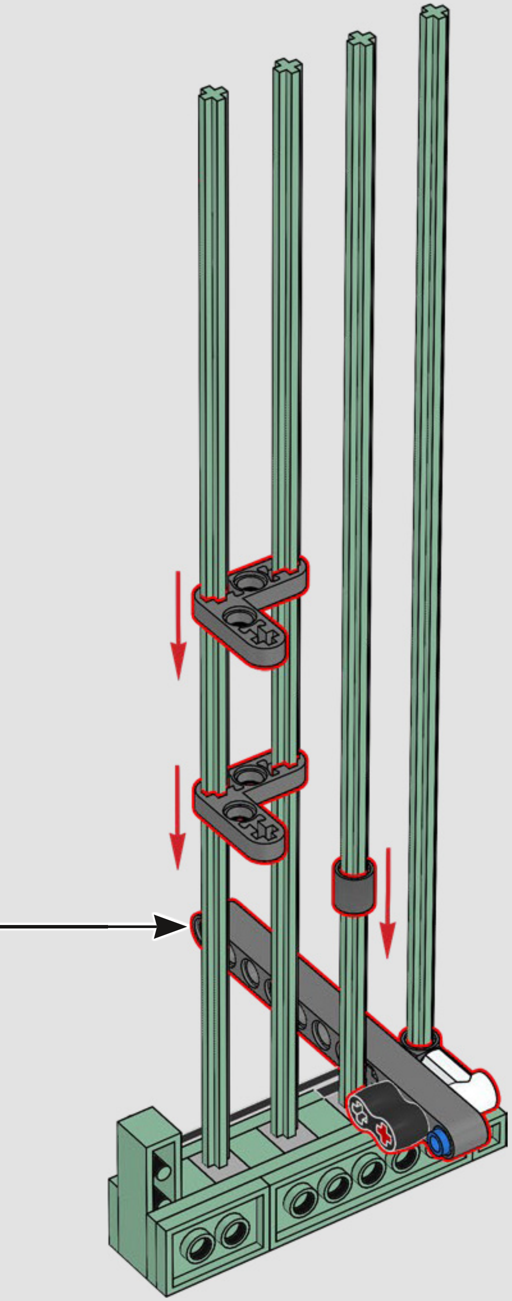

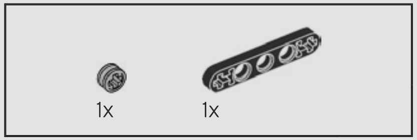

17

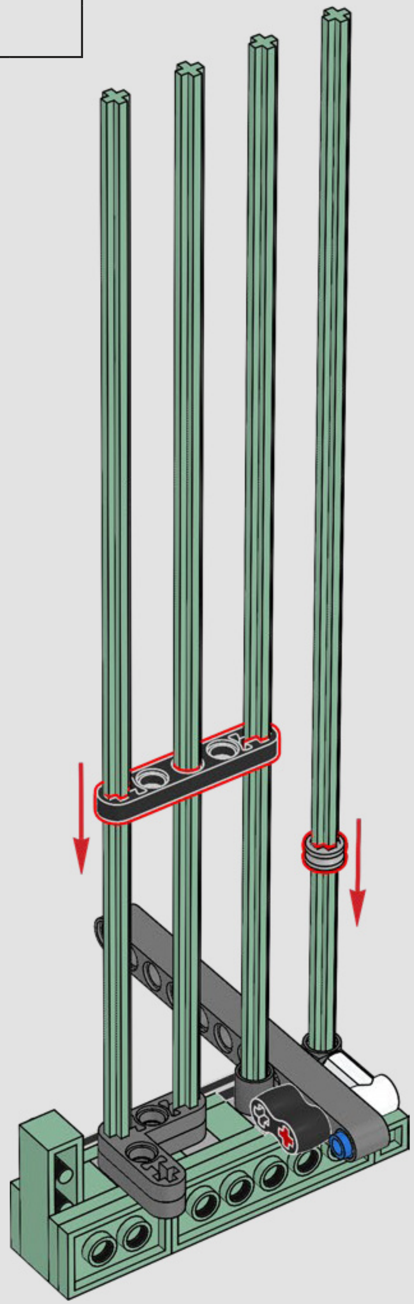

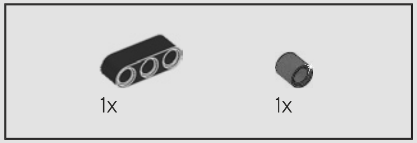

18

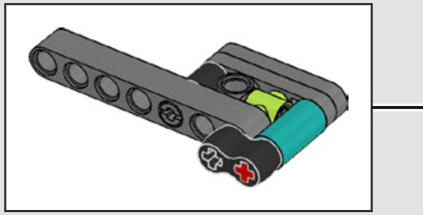

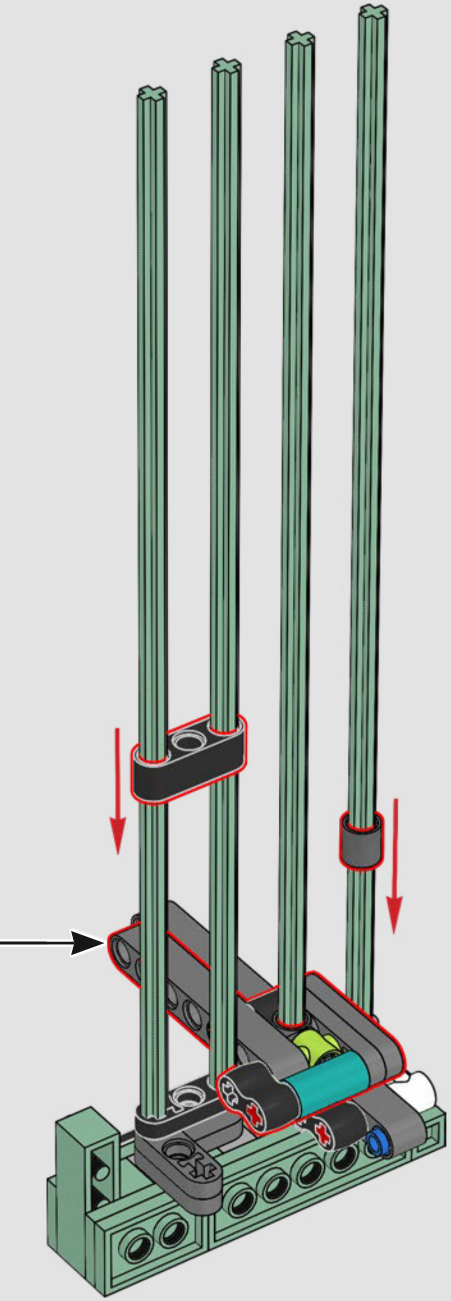

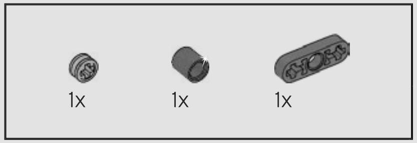

19

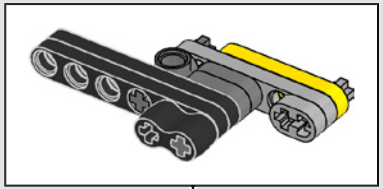

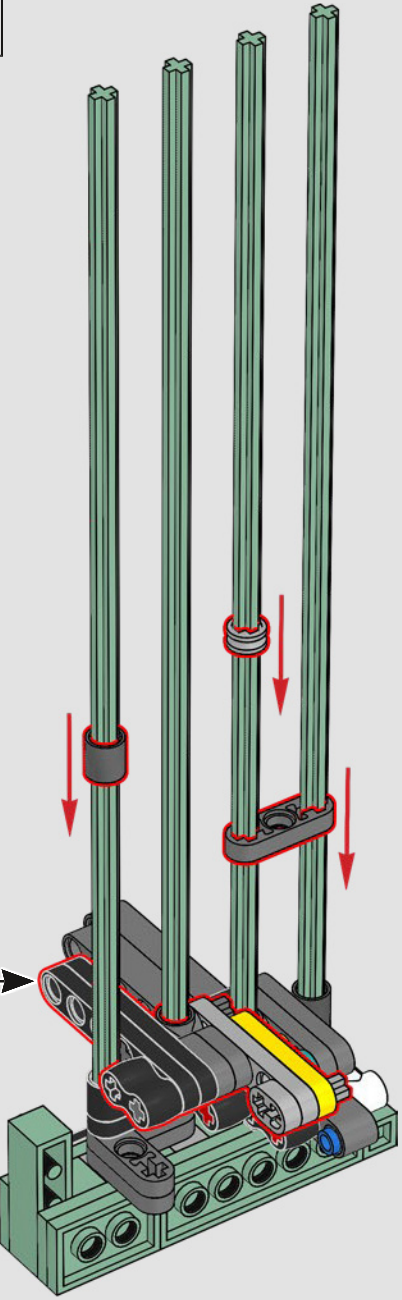

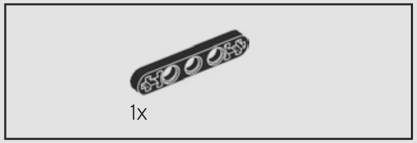

20

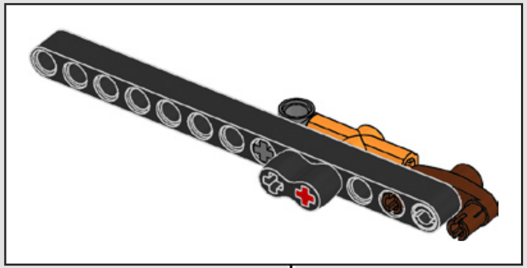

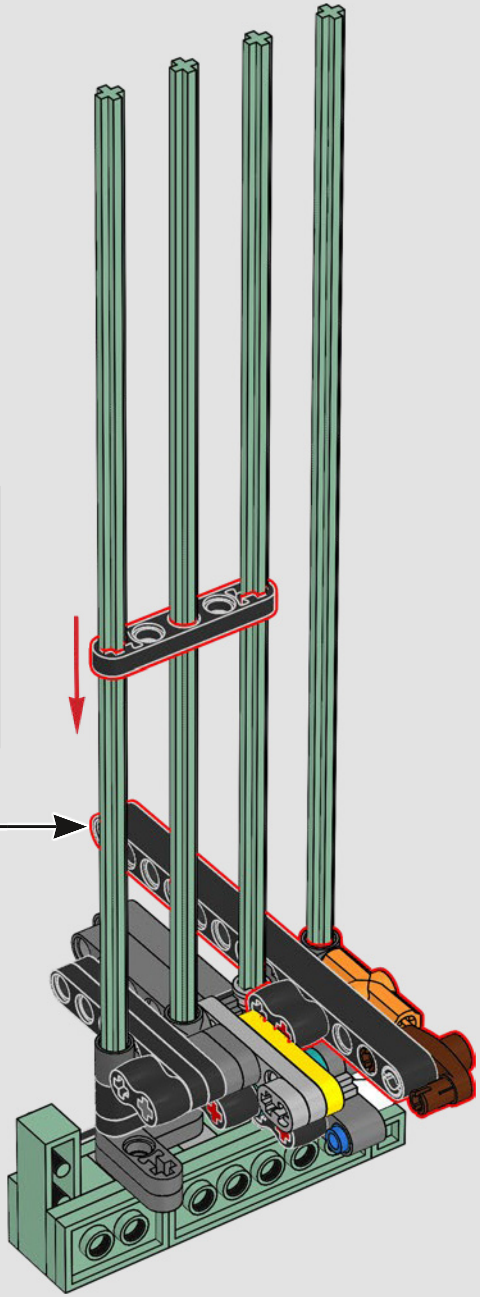

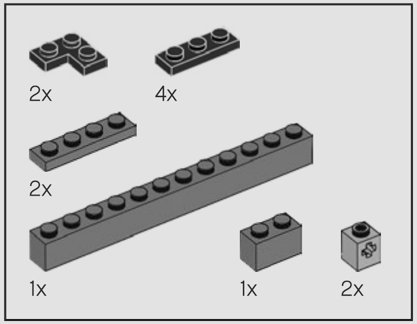
2x
4x
2x
1x
1x
2x

21

1

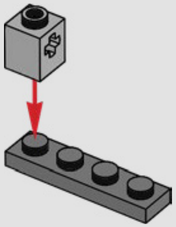

2

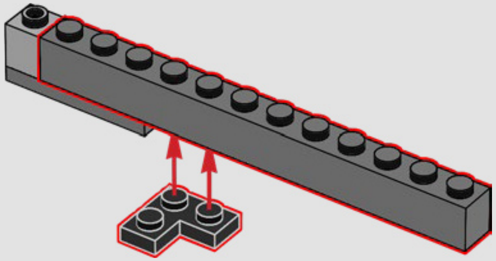

3

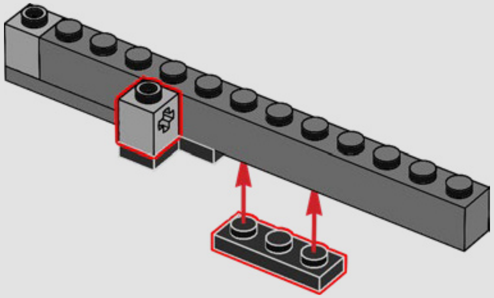

4

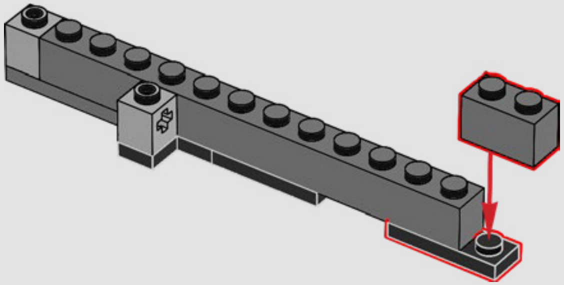

5

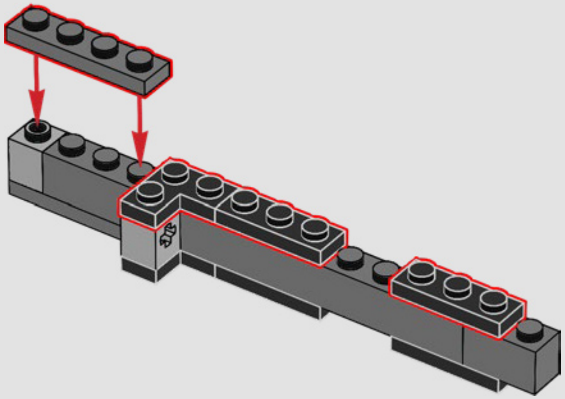

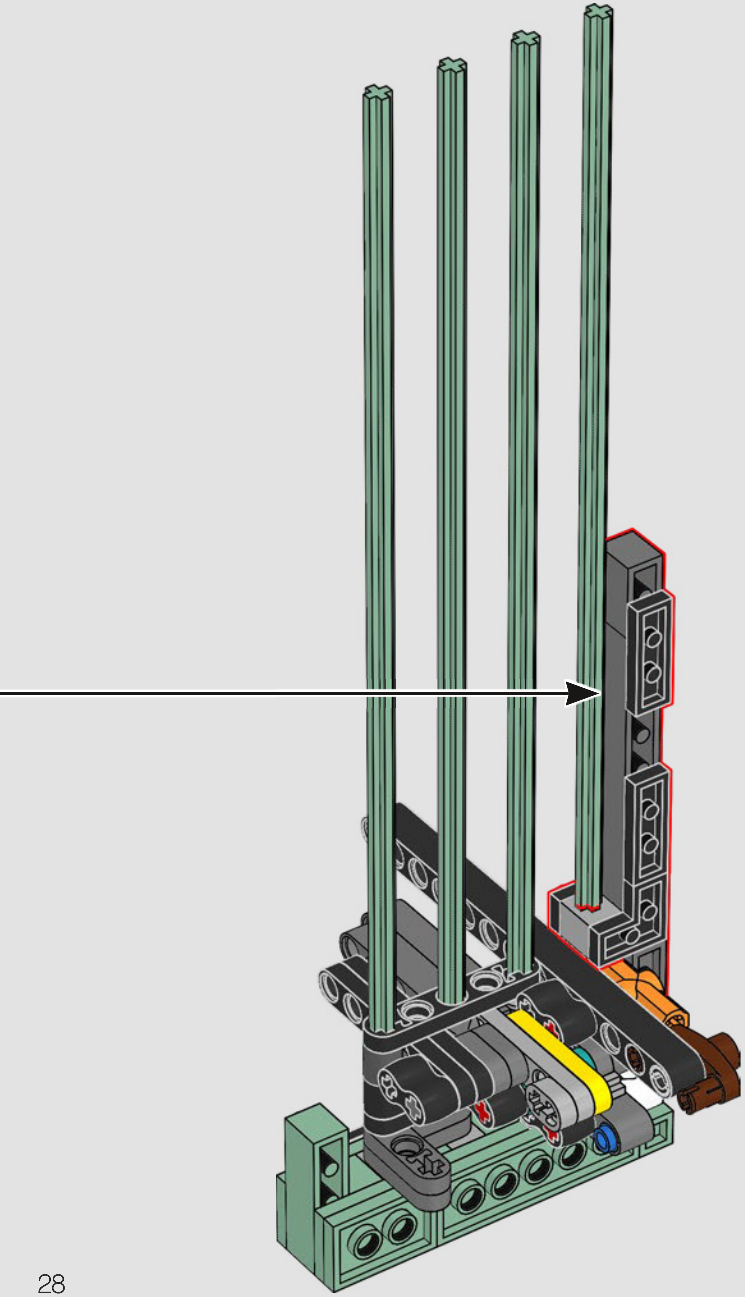

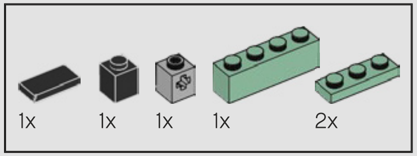
1x
1x
1x
1x
2x

22

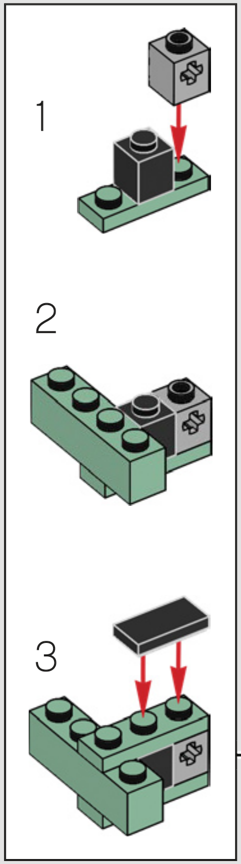

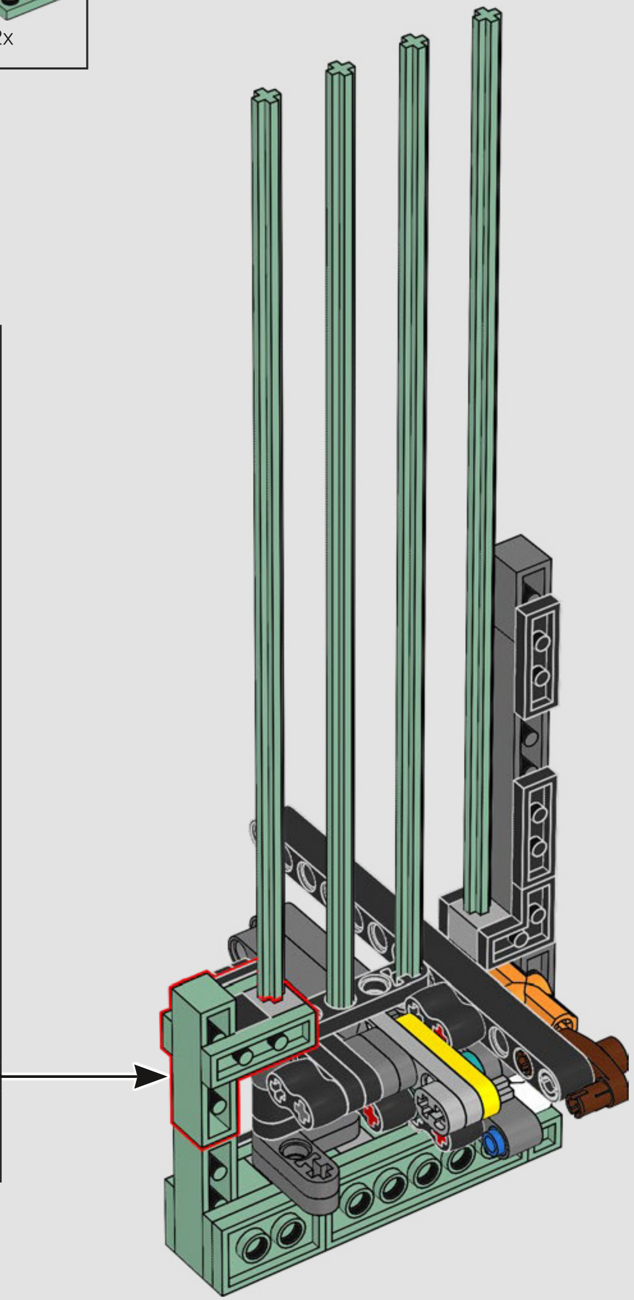

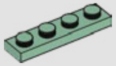

23

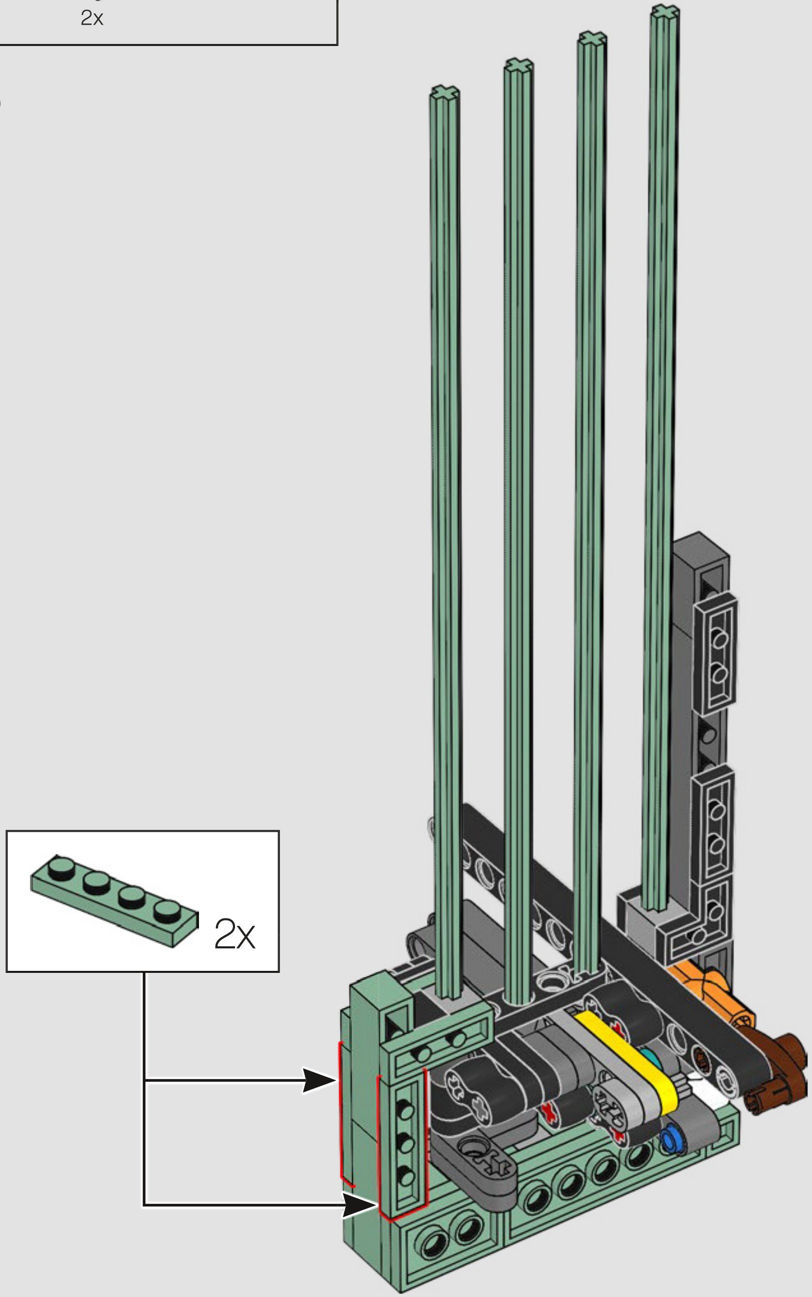

24

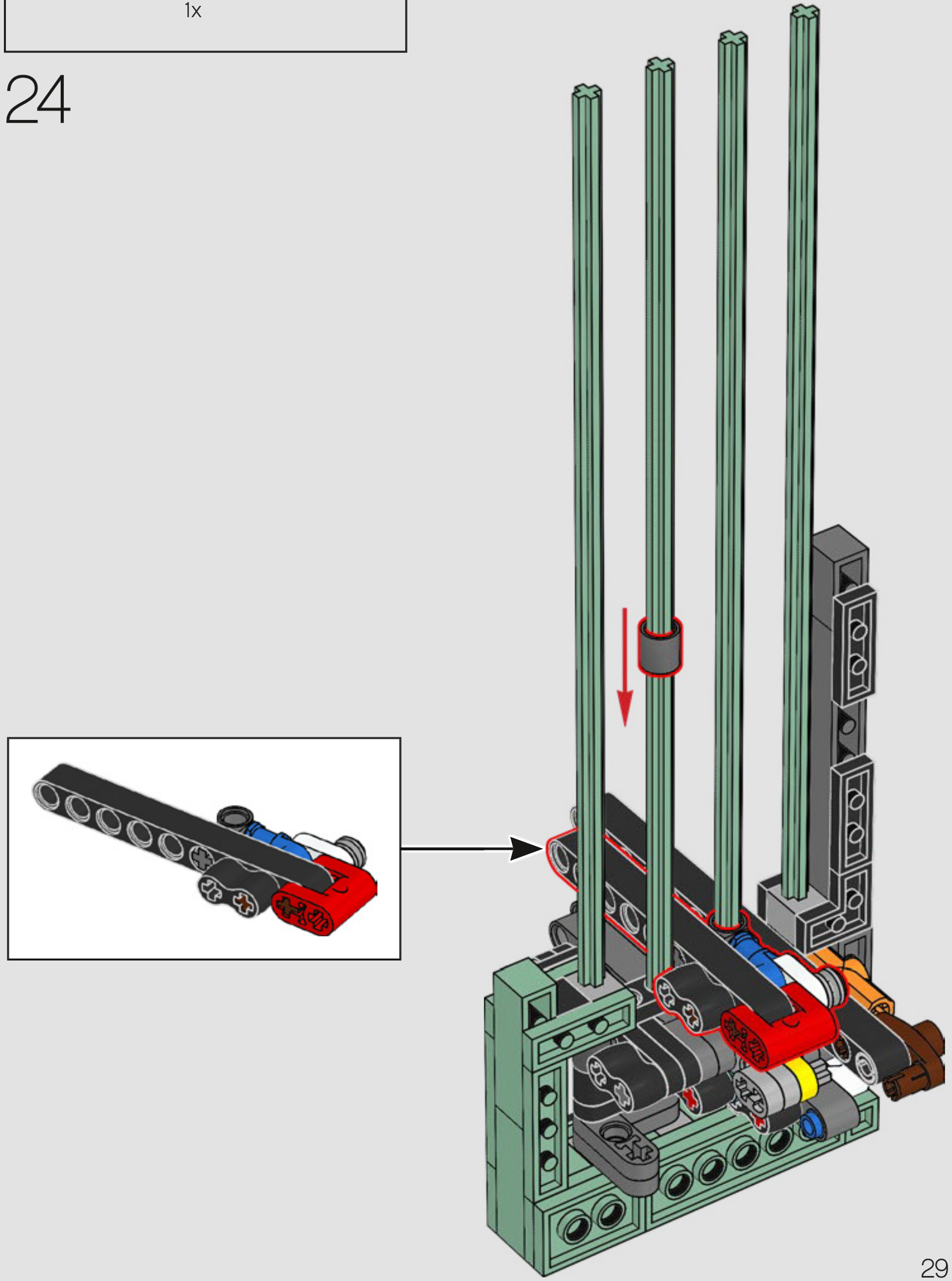

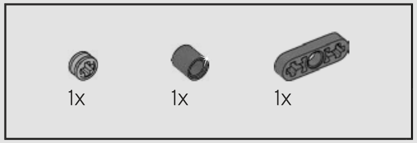

25

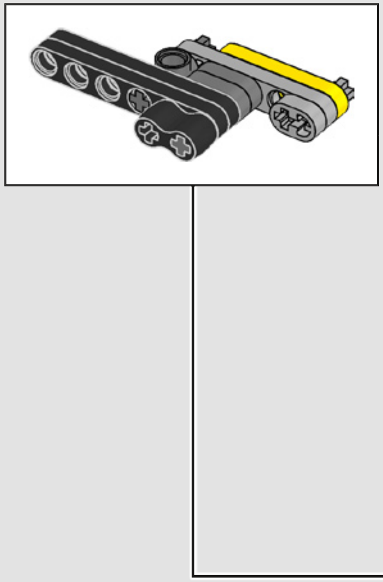

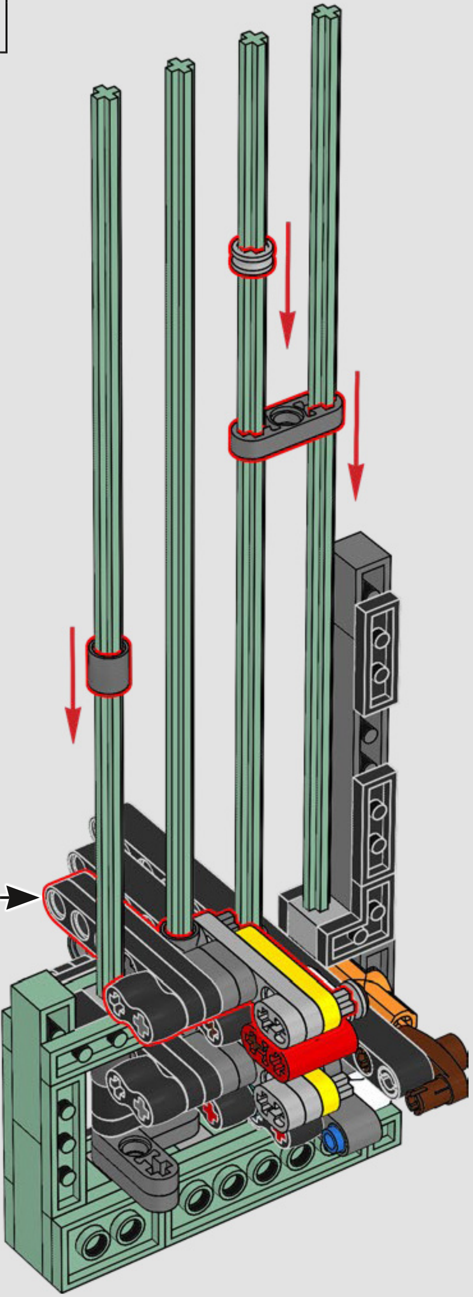

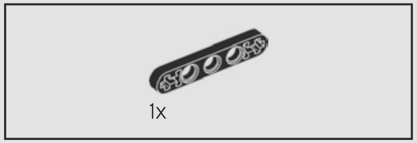

26

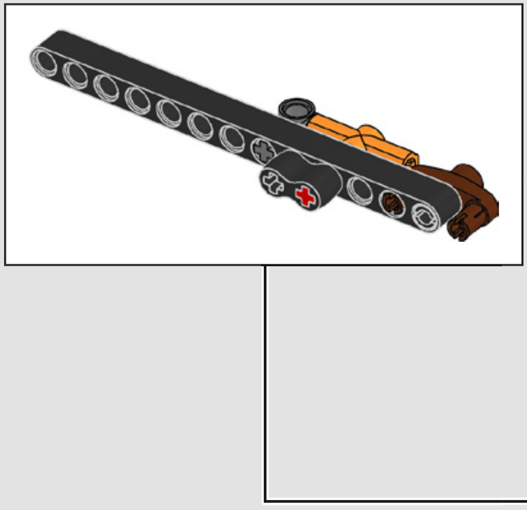

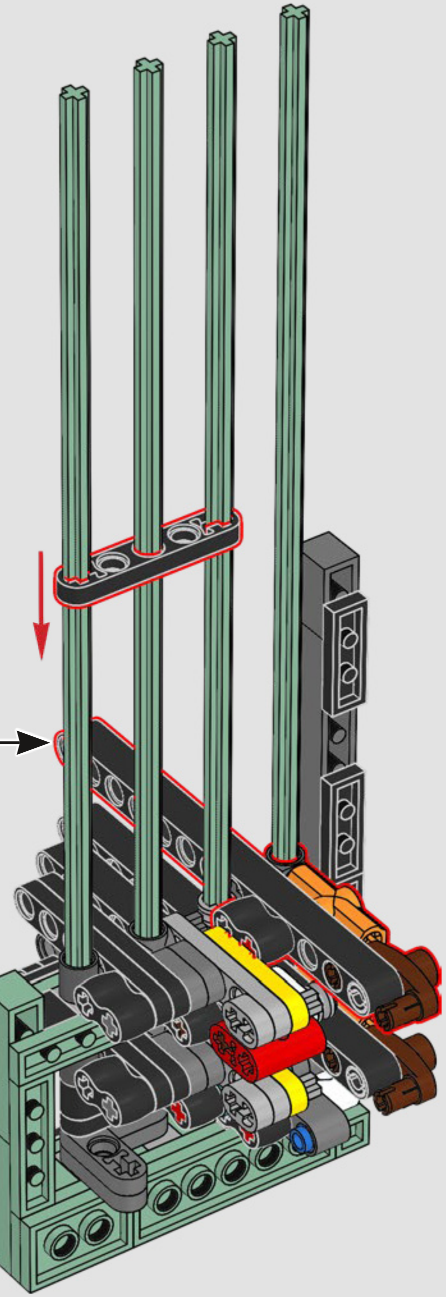

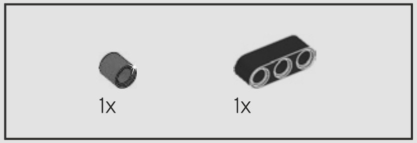

27

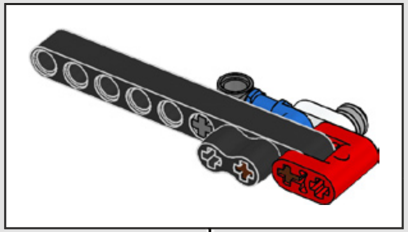

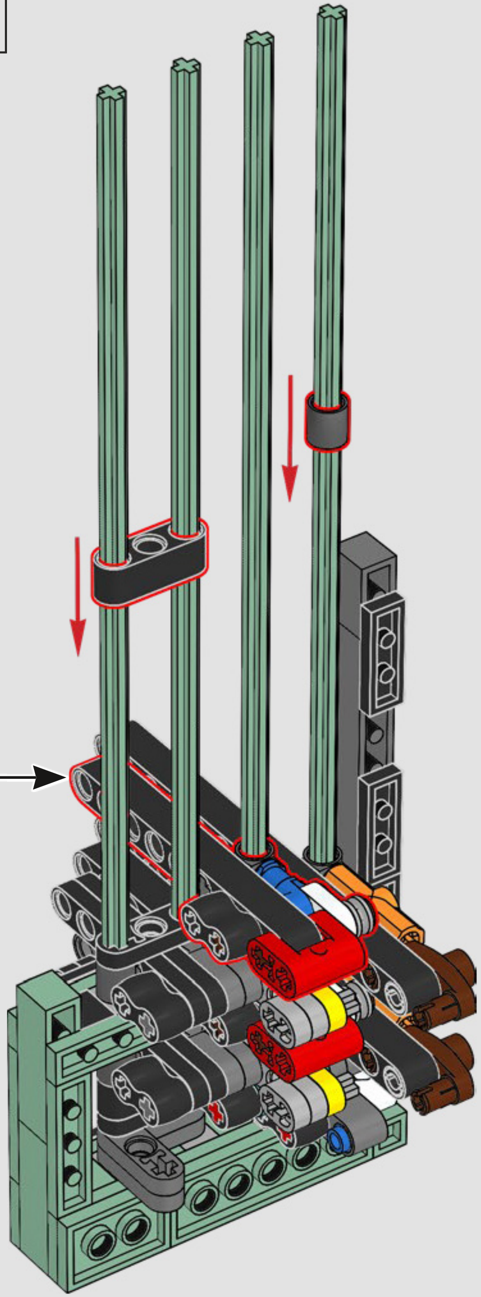

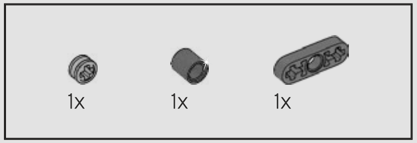

28

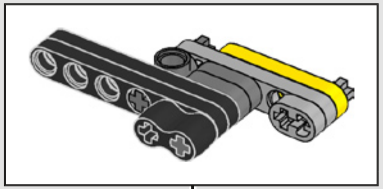

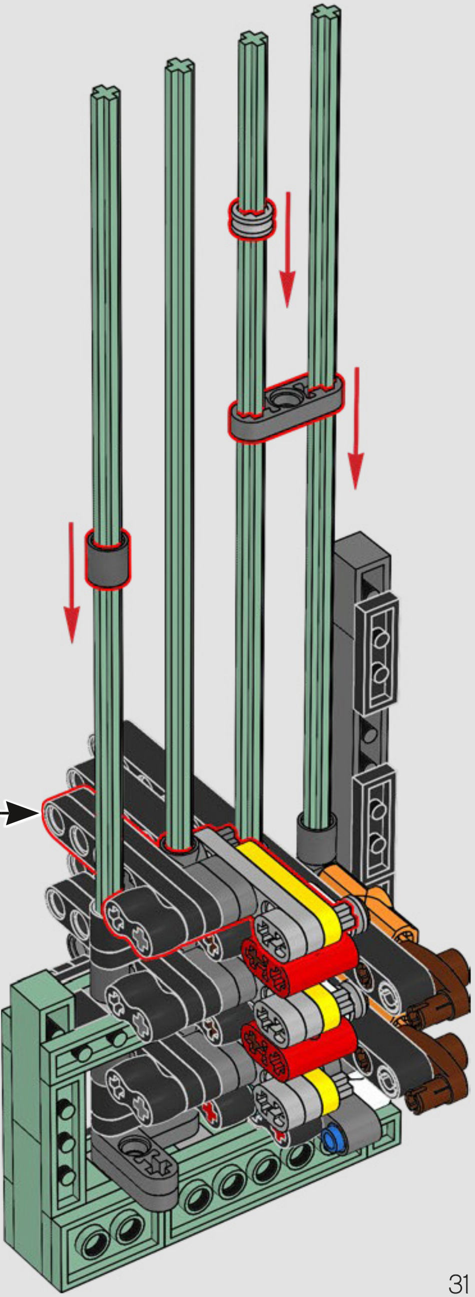

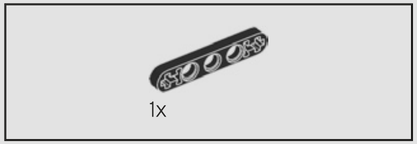

29

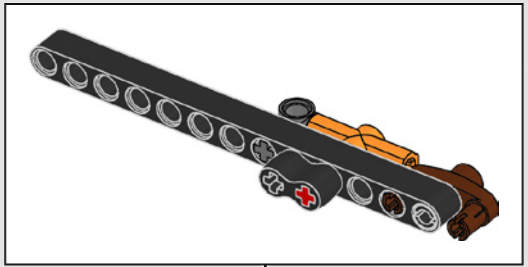

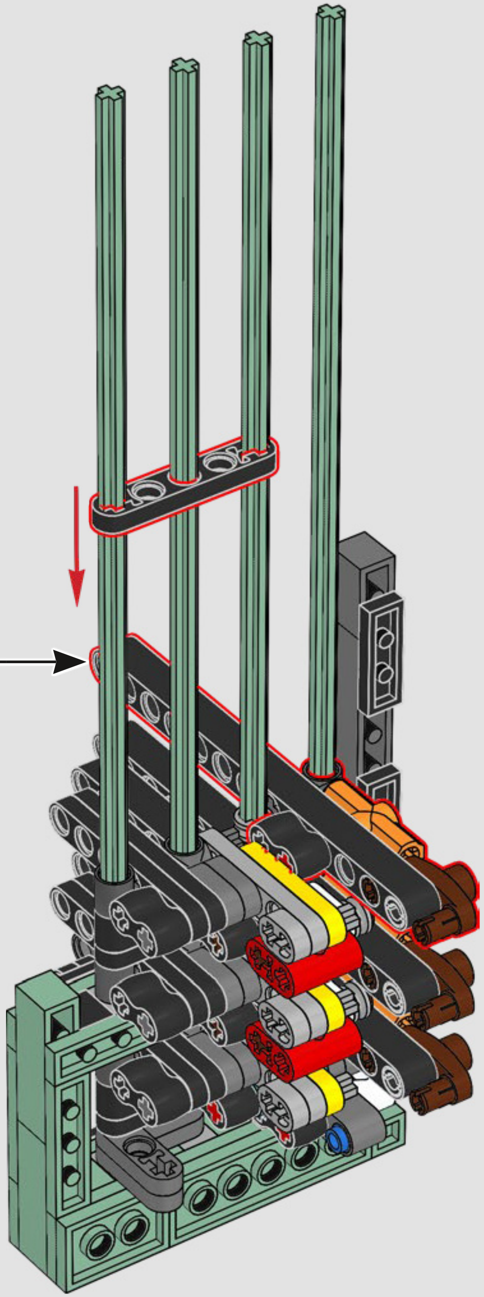

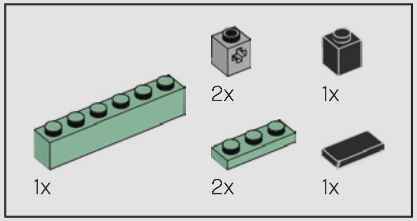
1x
2x
1x
2x
1x

30

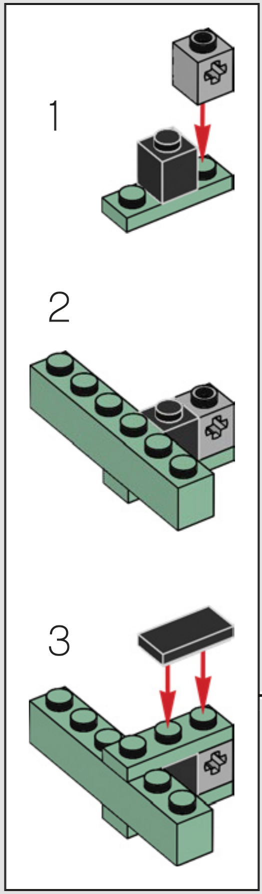

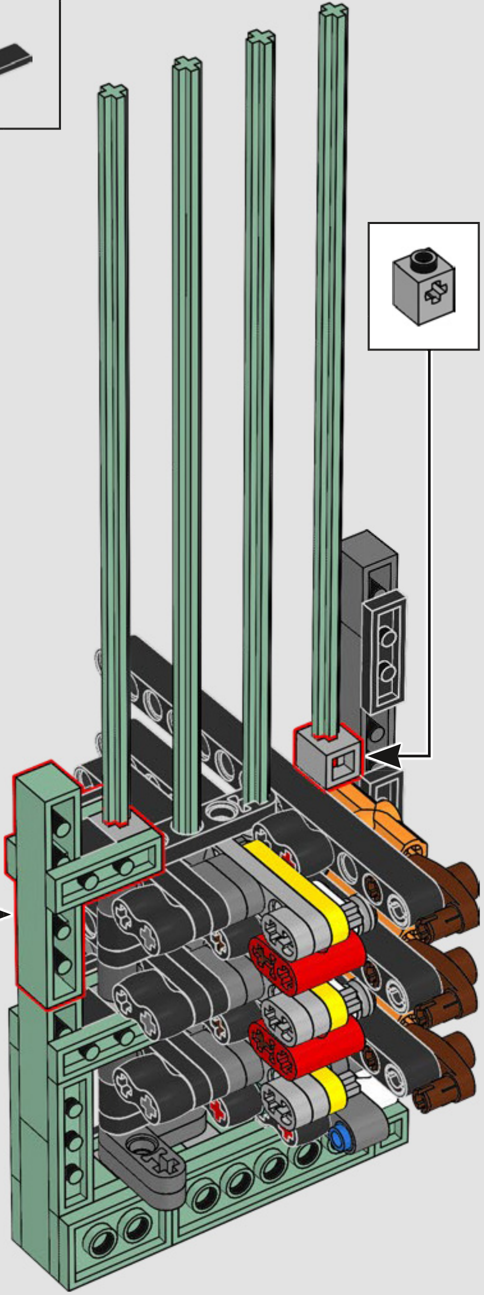

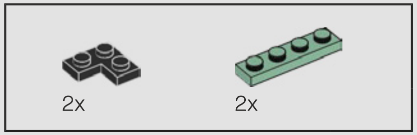

31

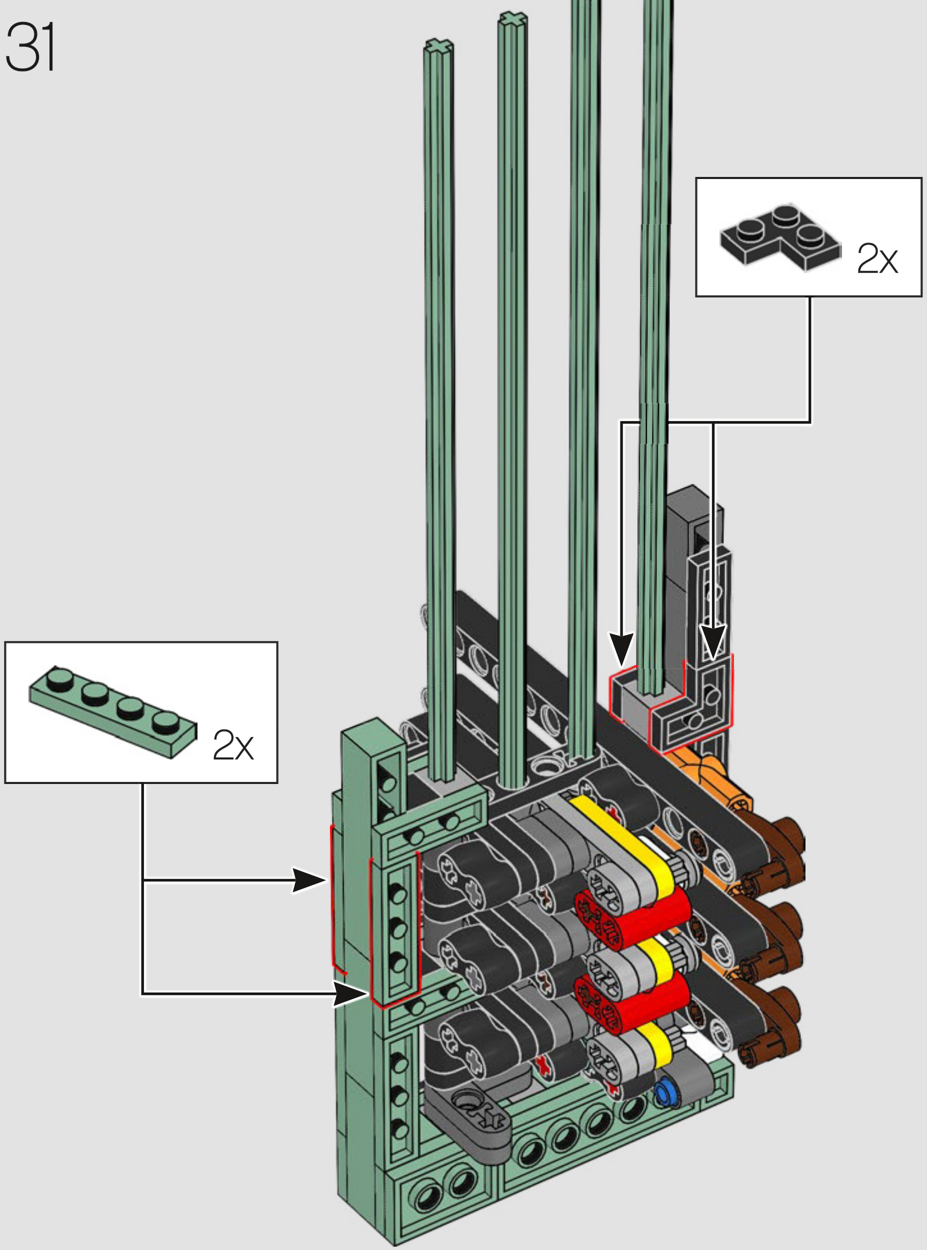

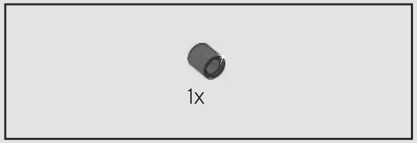

32

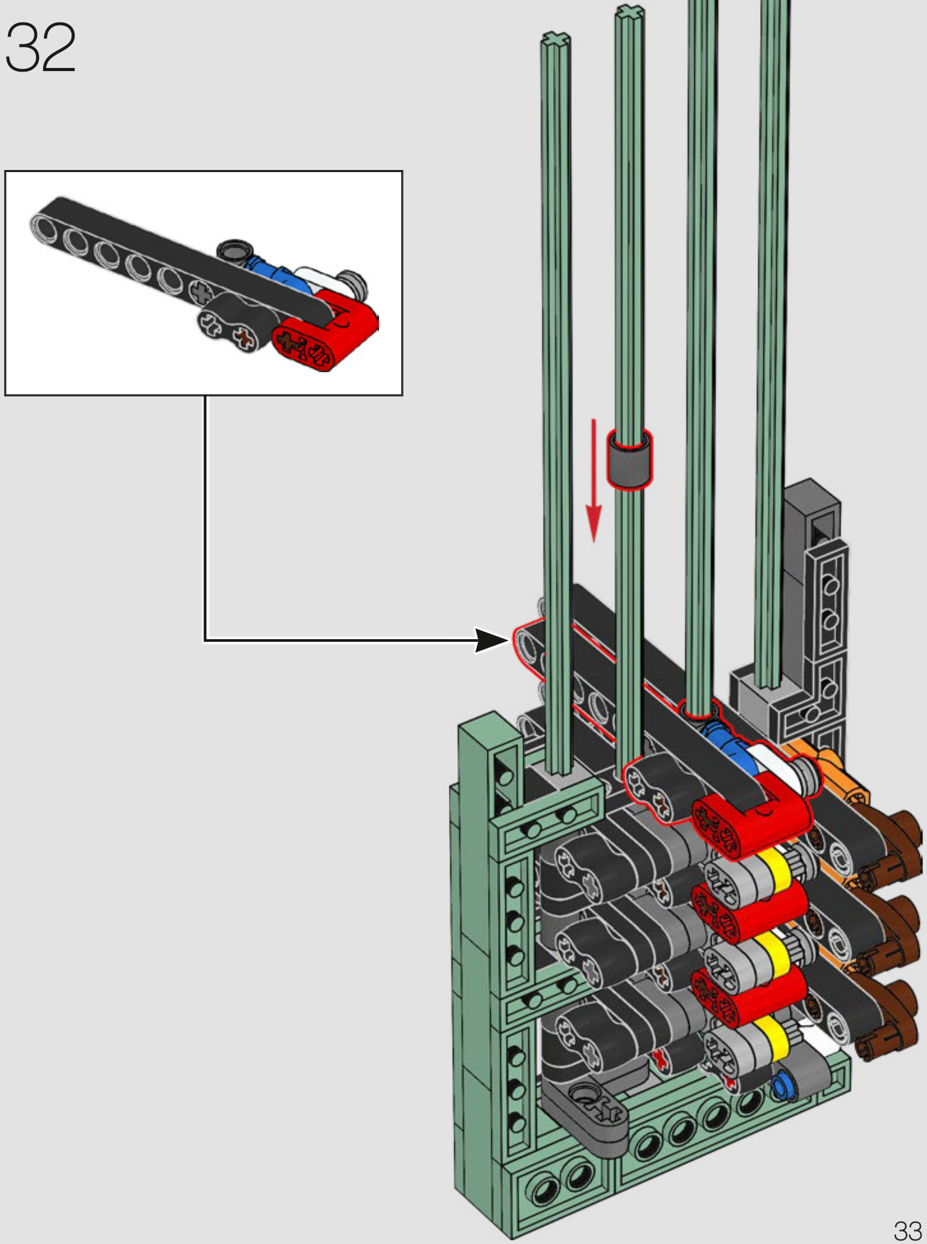

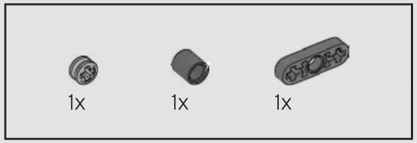

33

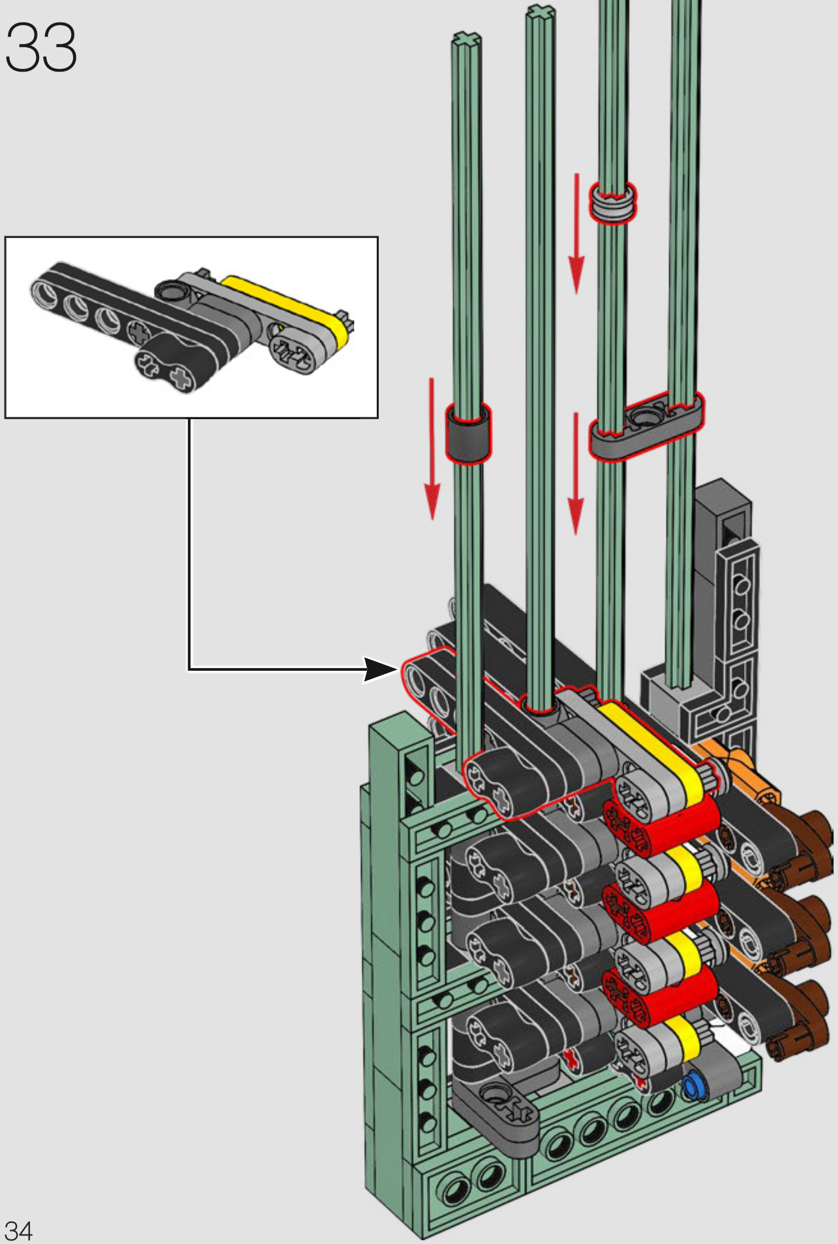

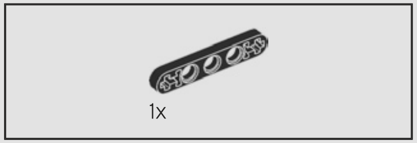

34

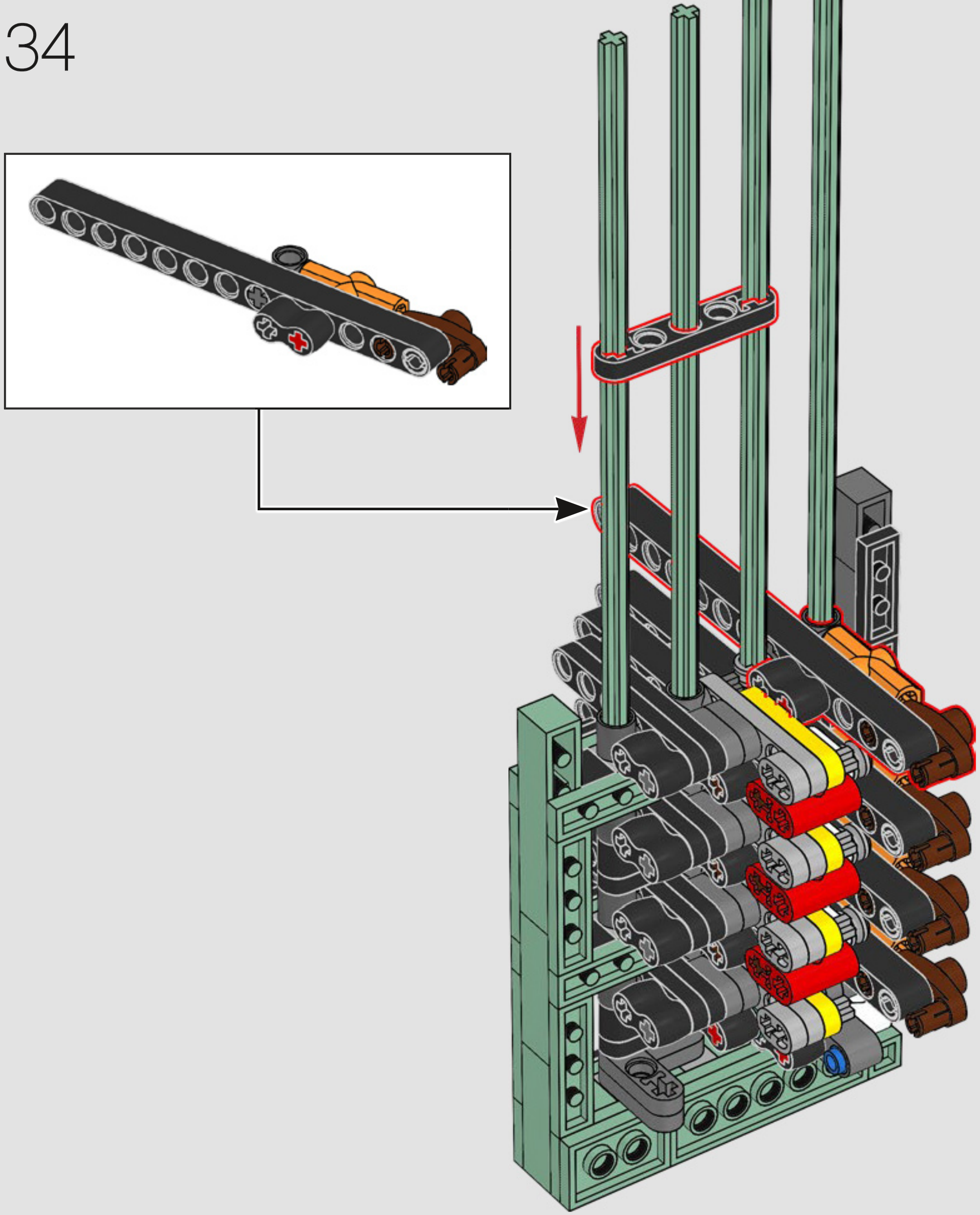

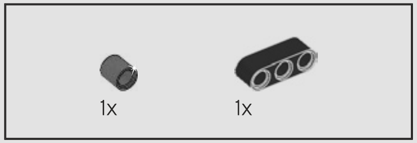

35

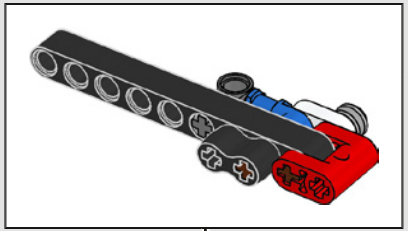

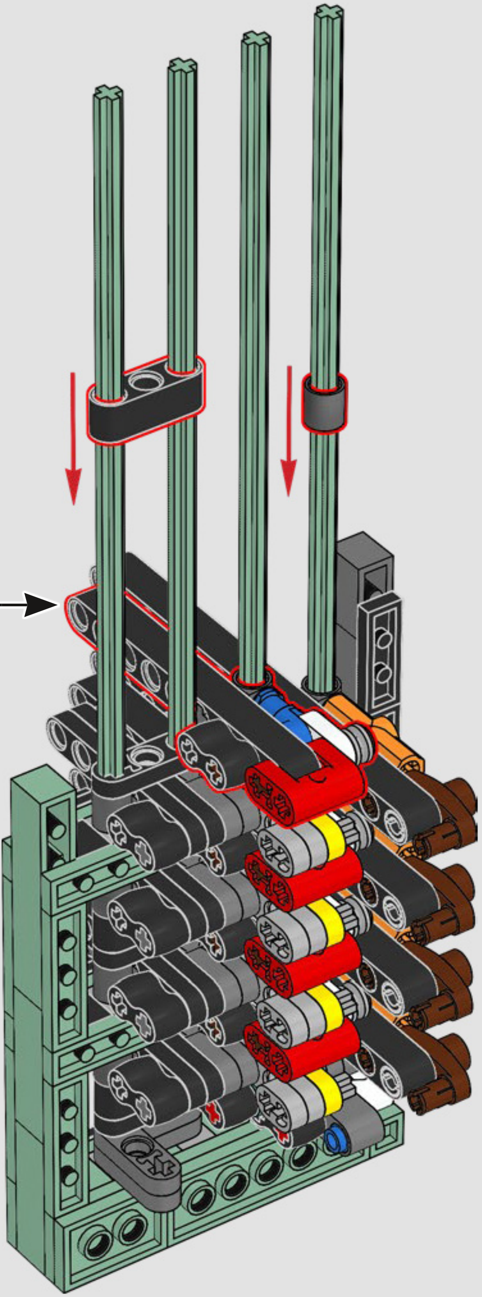

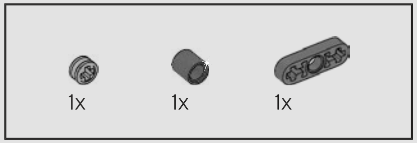

36

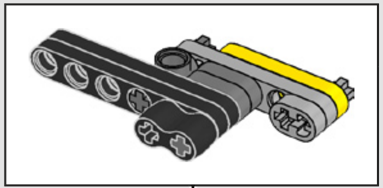

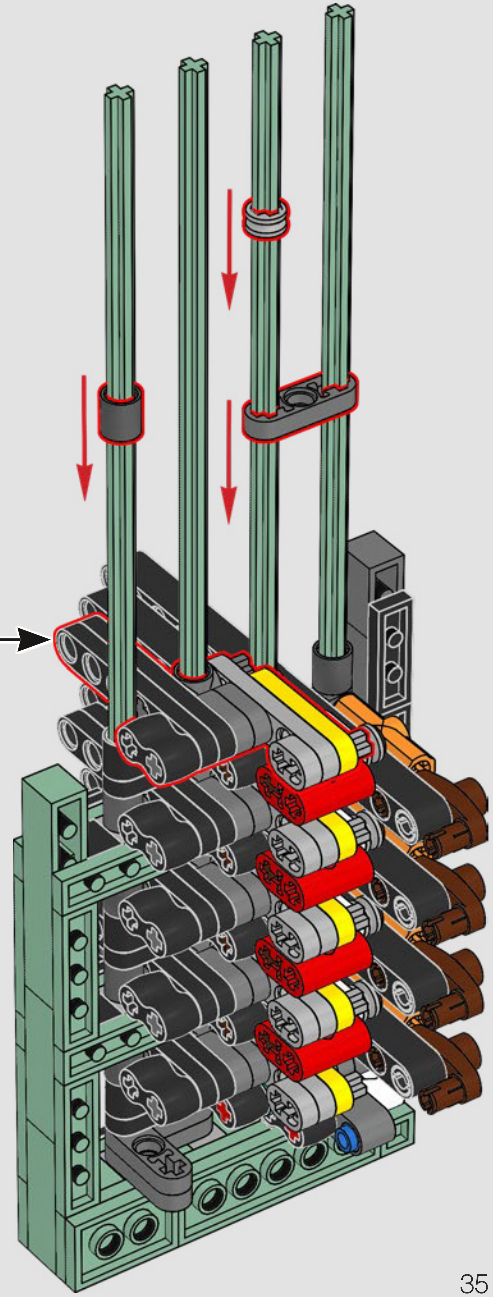

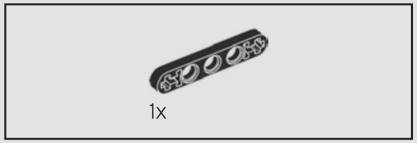

37

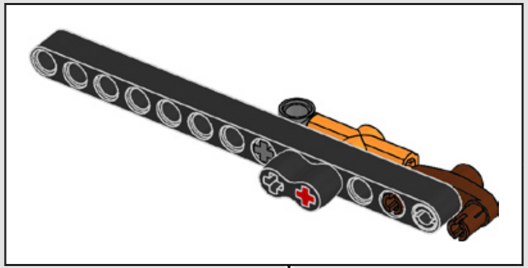

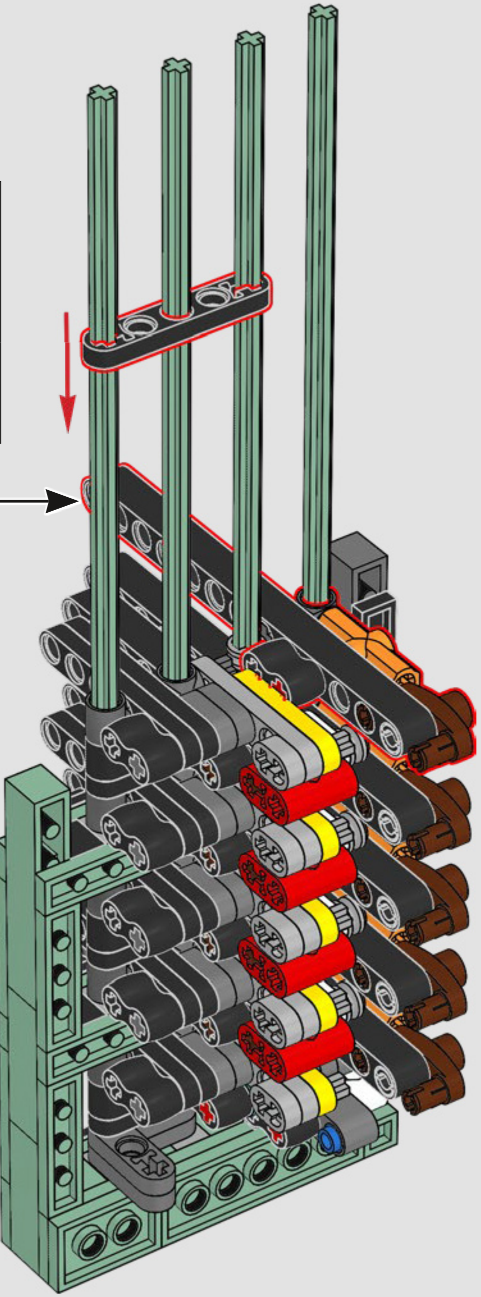

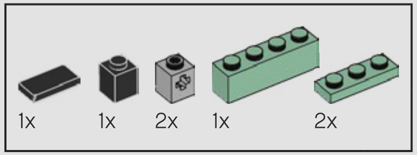
1x
1x
2x
1x
2x

38

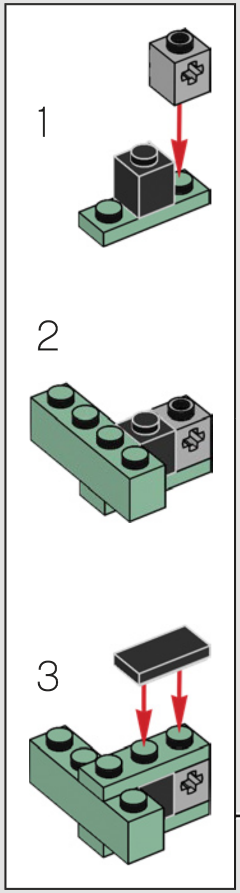

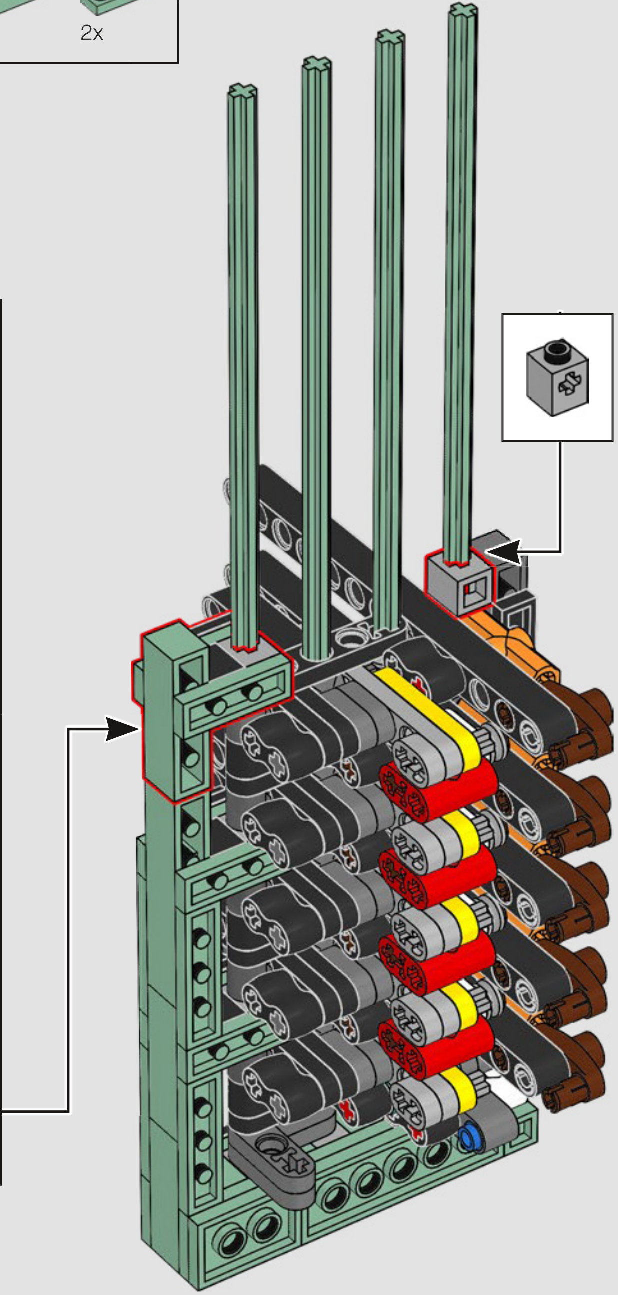

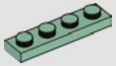

39

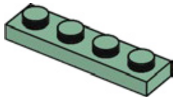

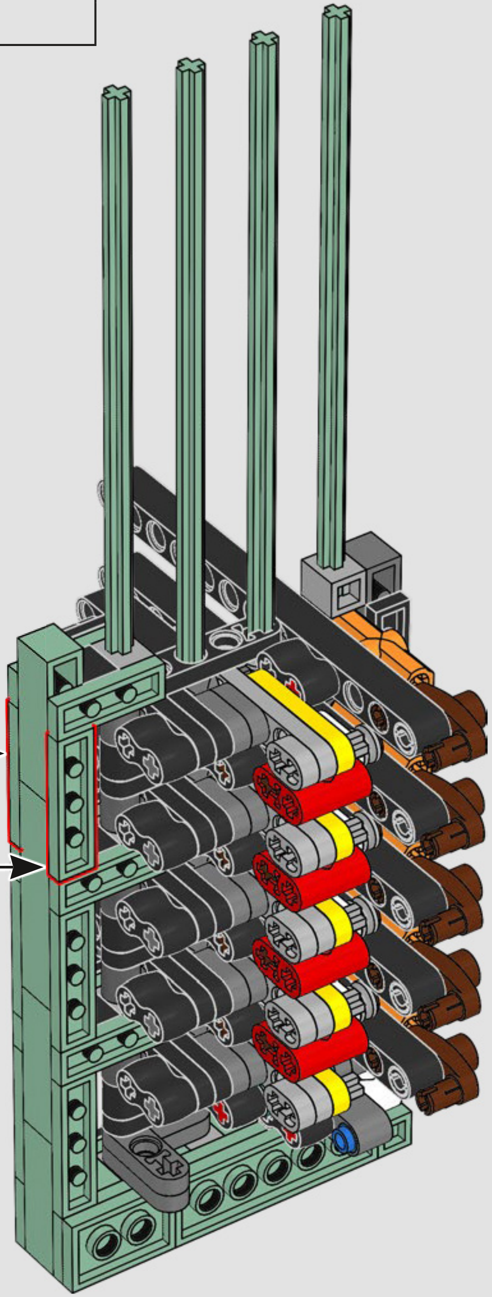

40

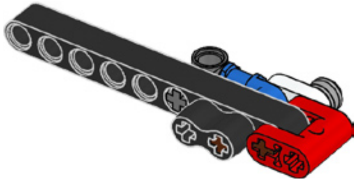

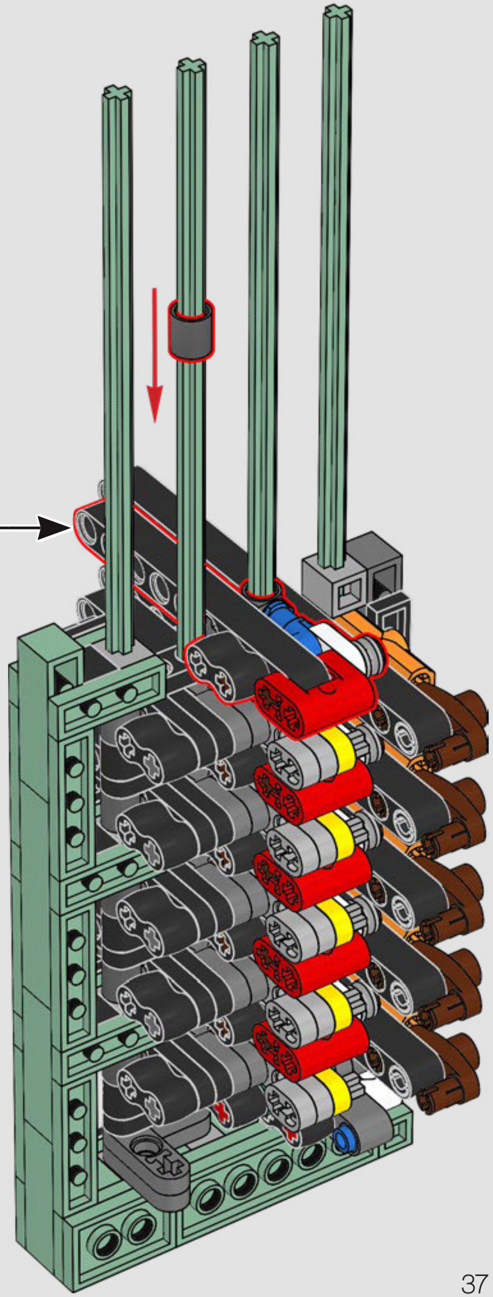

41

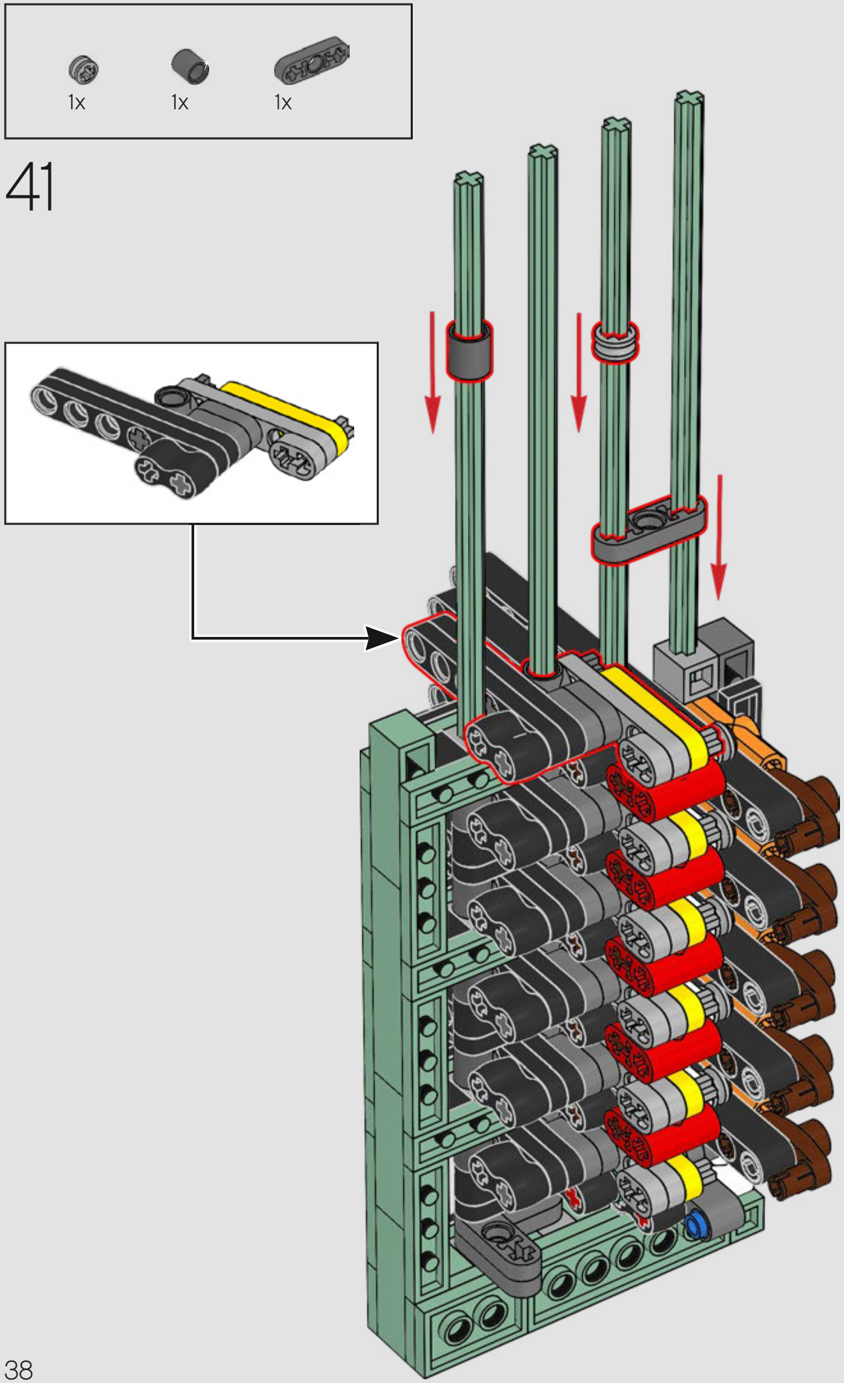

42

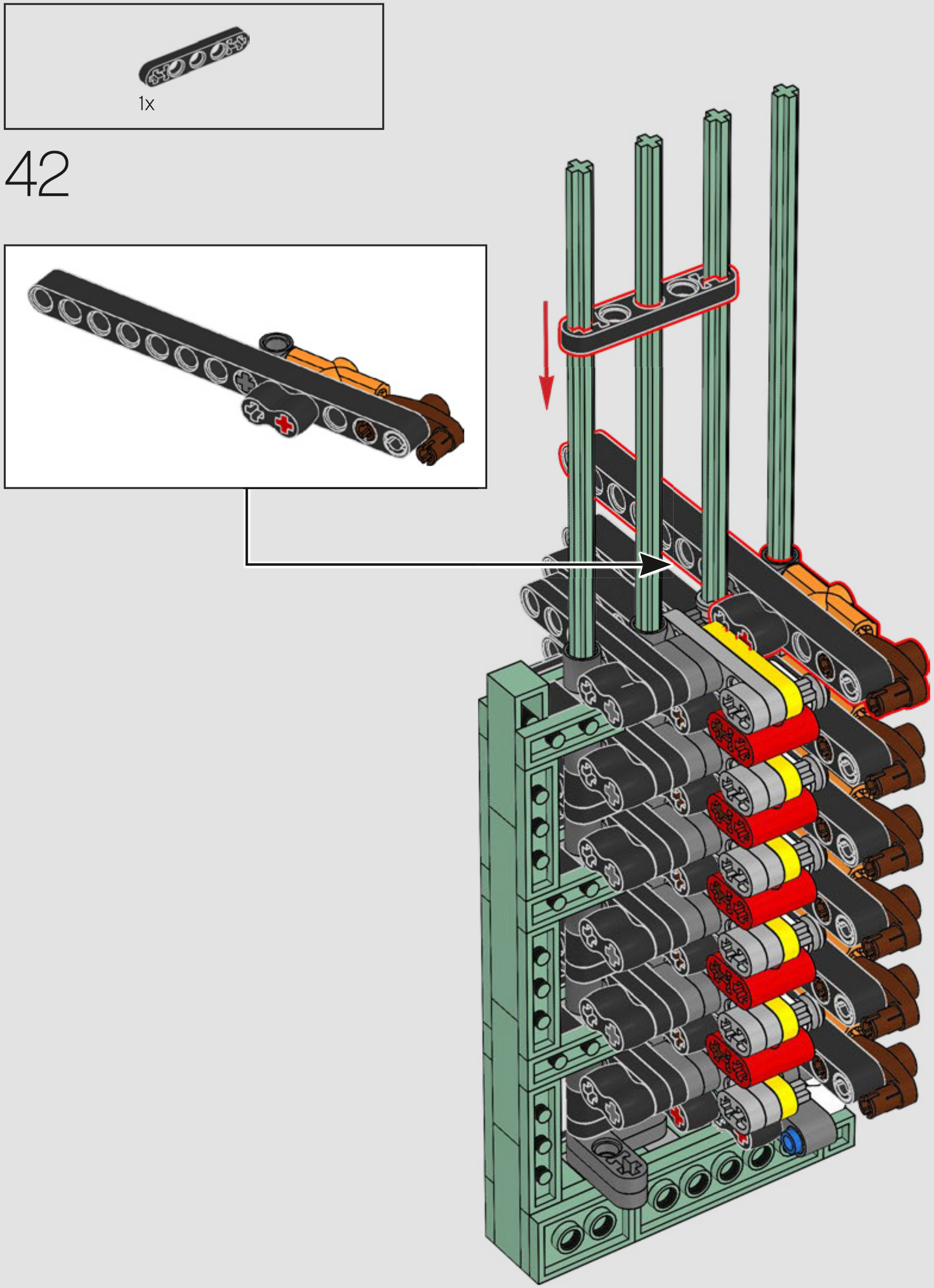

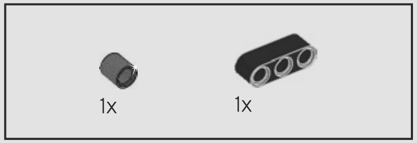

43

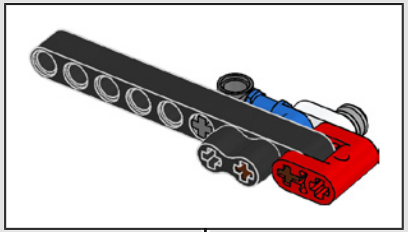

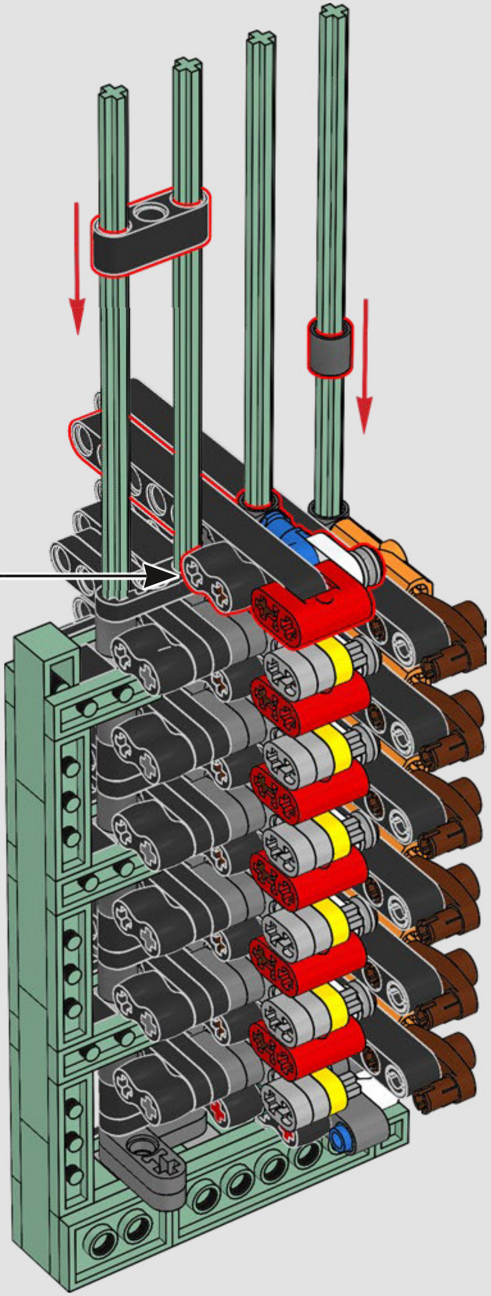

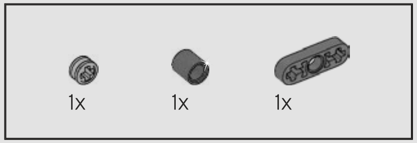

44

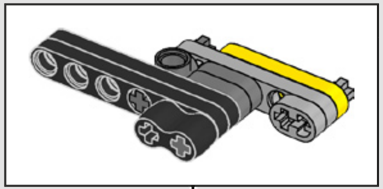

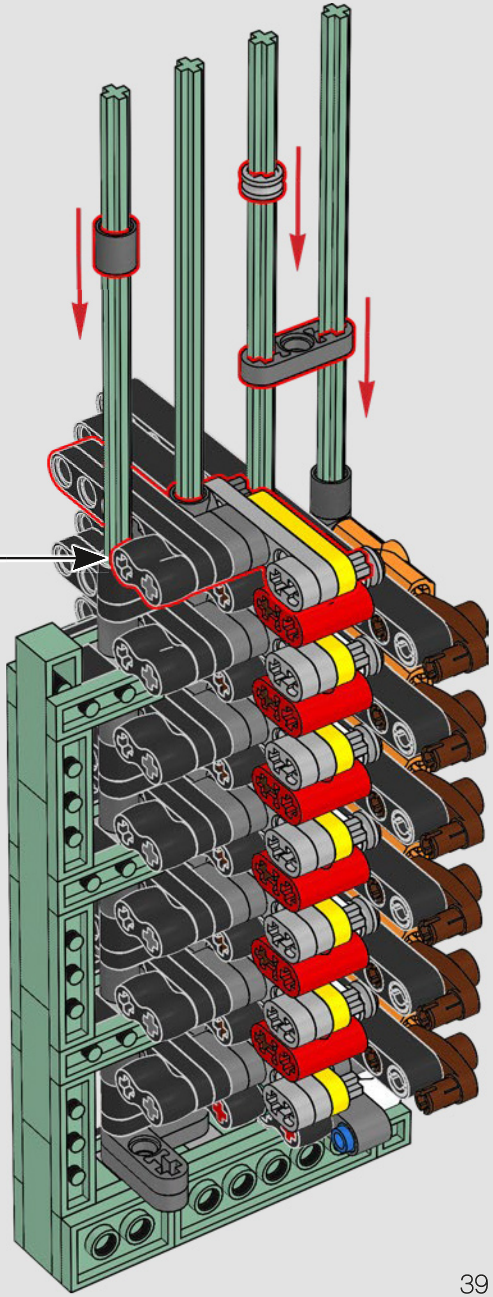

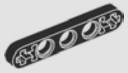

1x

45

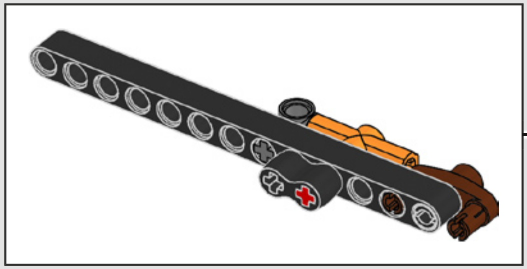

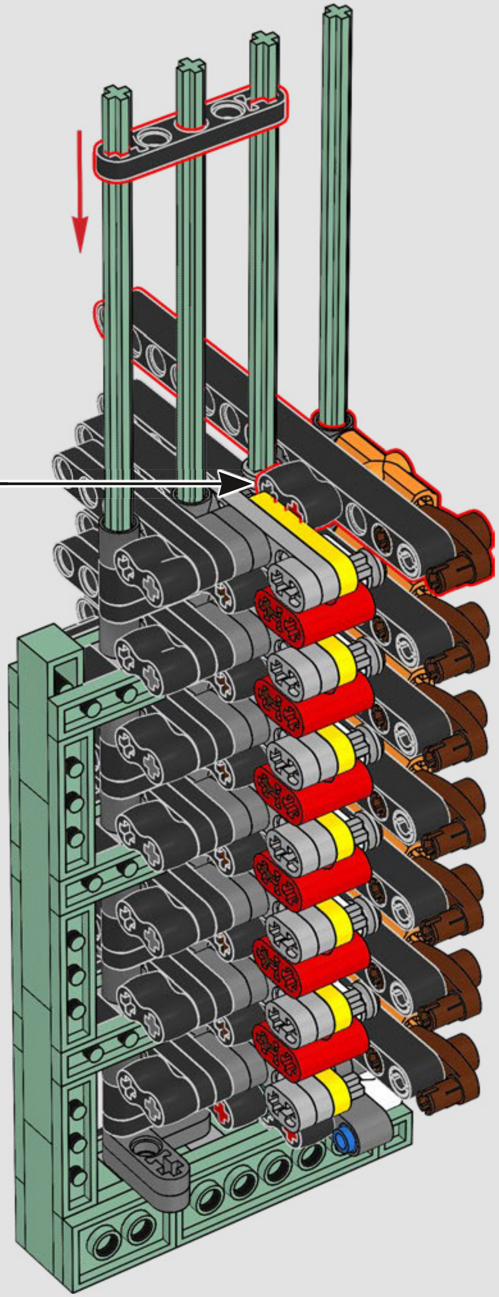

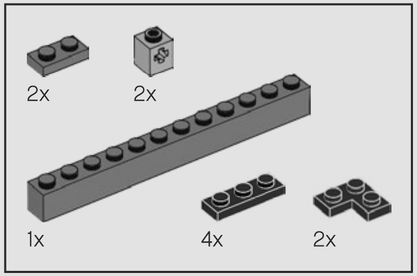
2x
2x
1x
4x
2x

46

1

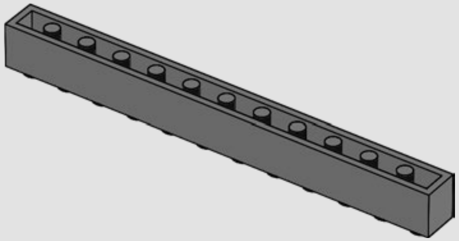

2

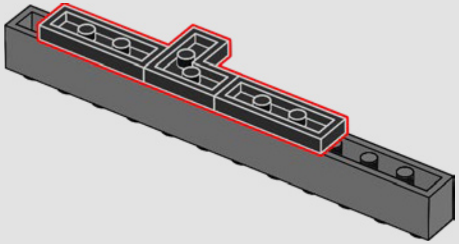

3

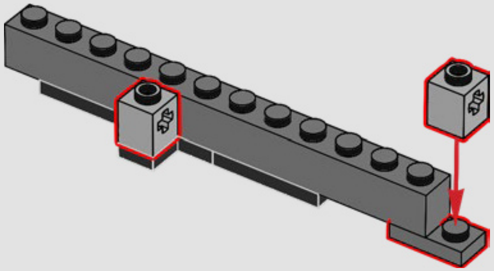

4

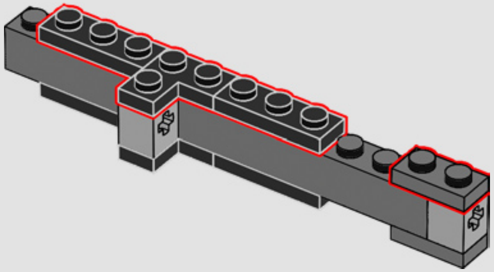

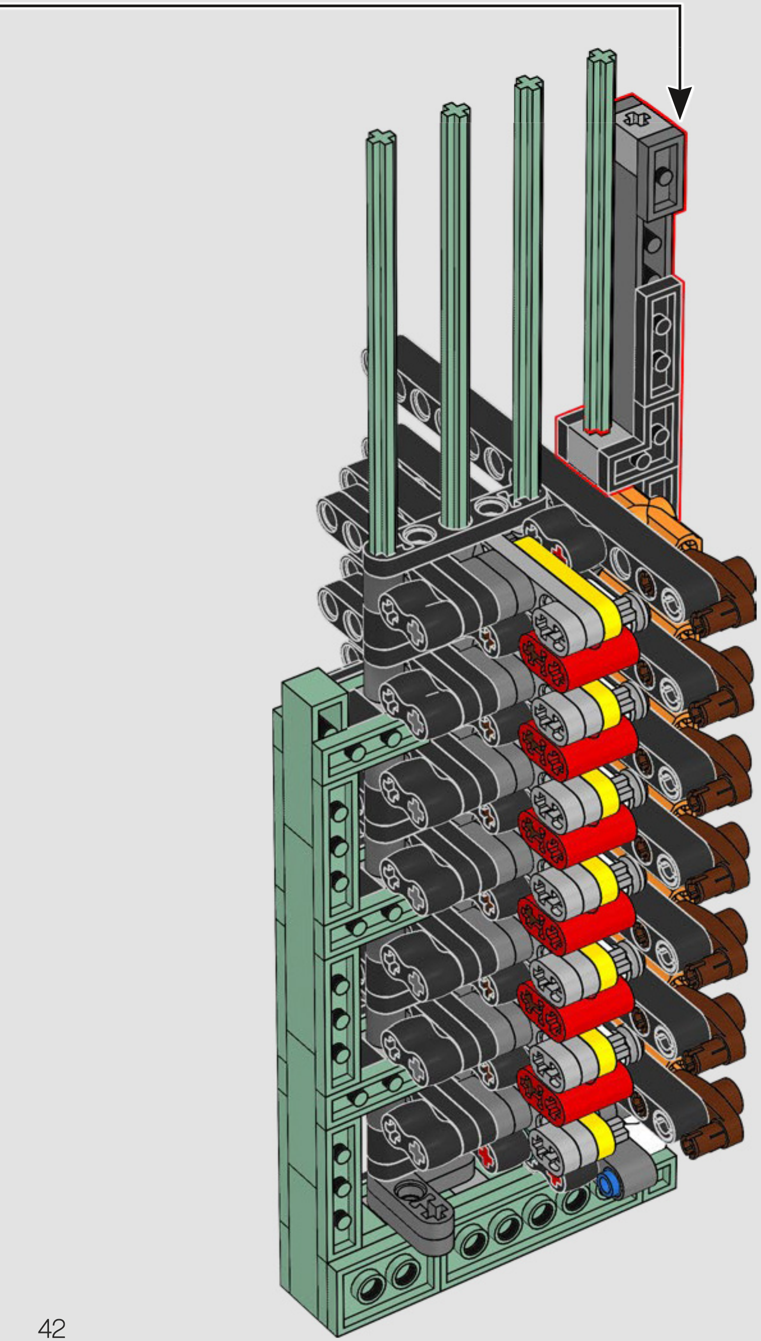

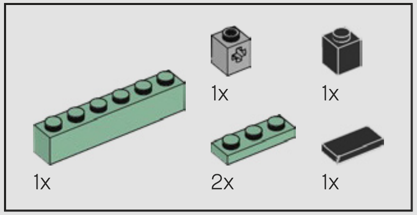
1x
1x
1x
2x
1x
1x

47

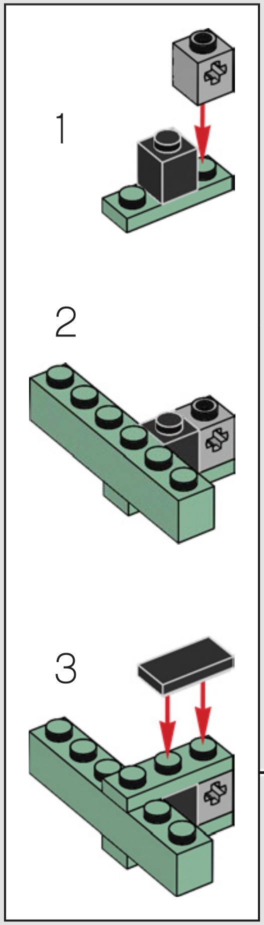

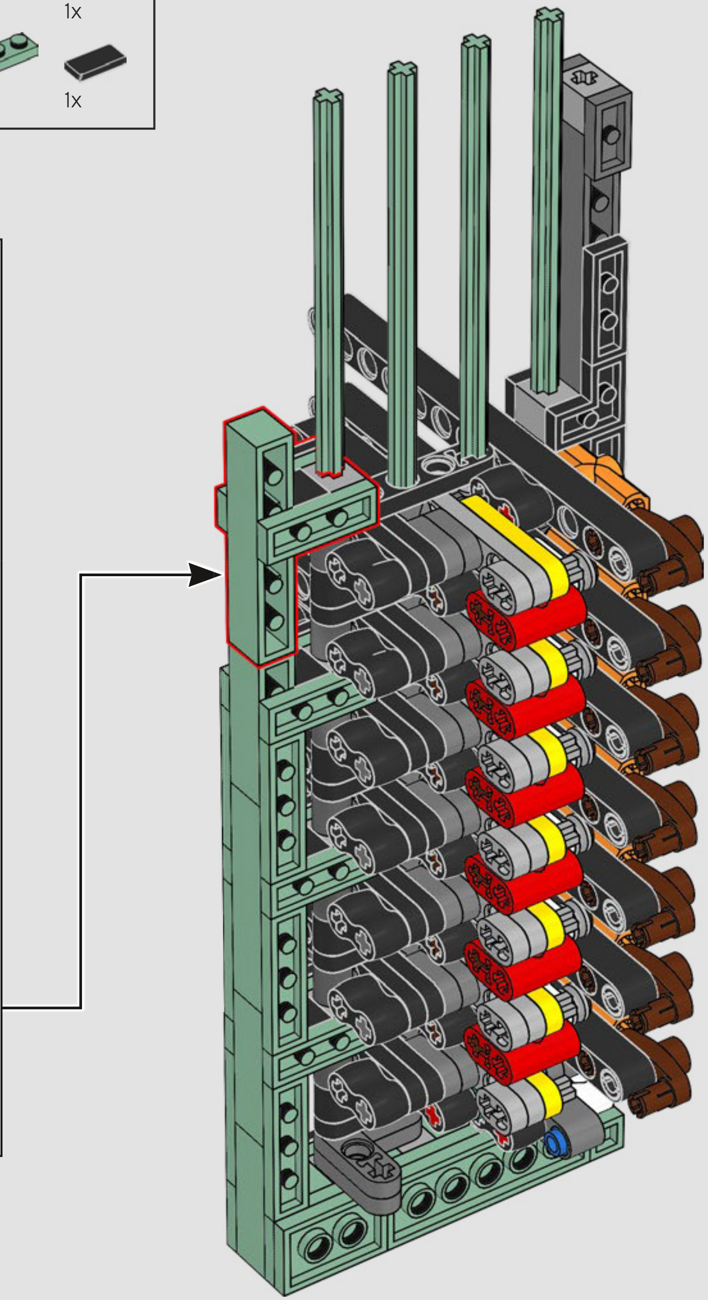

48

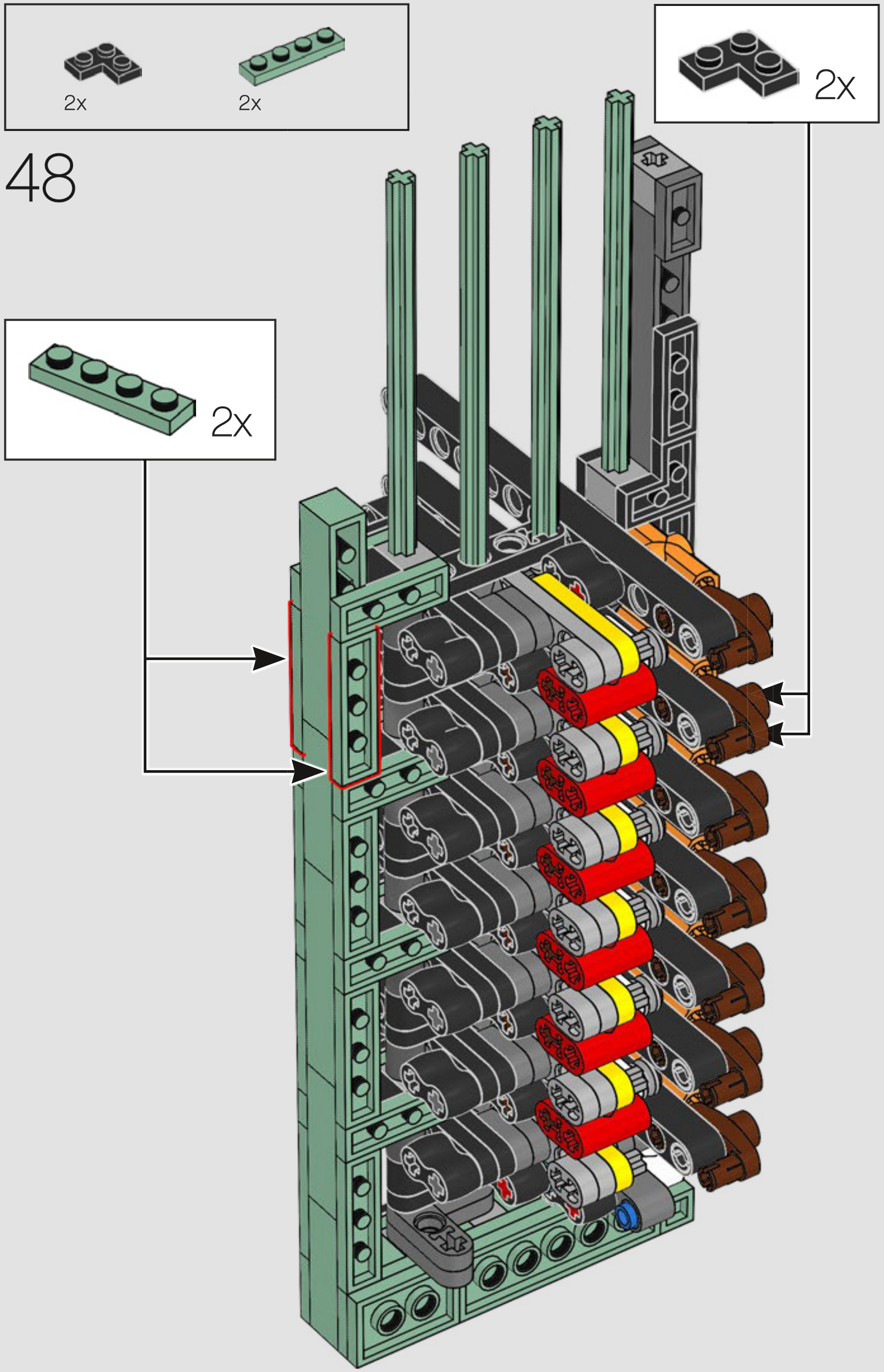

49

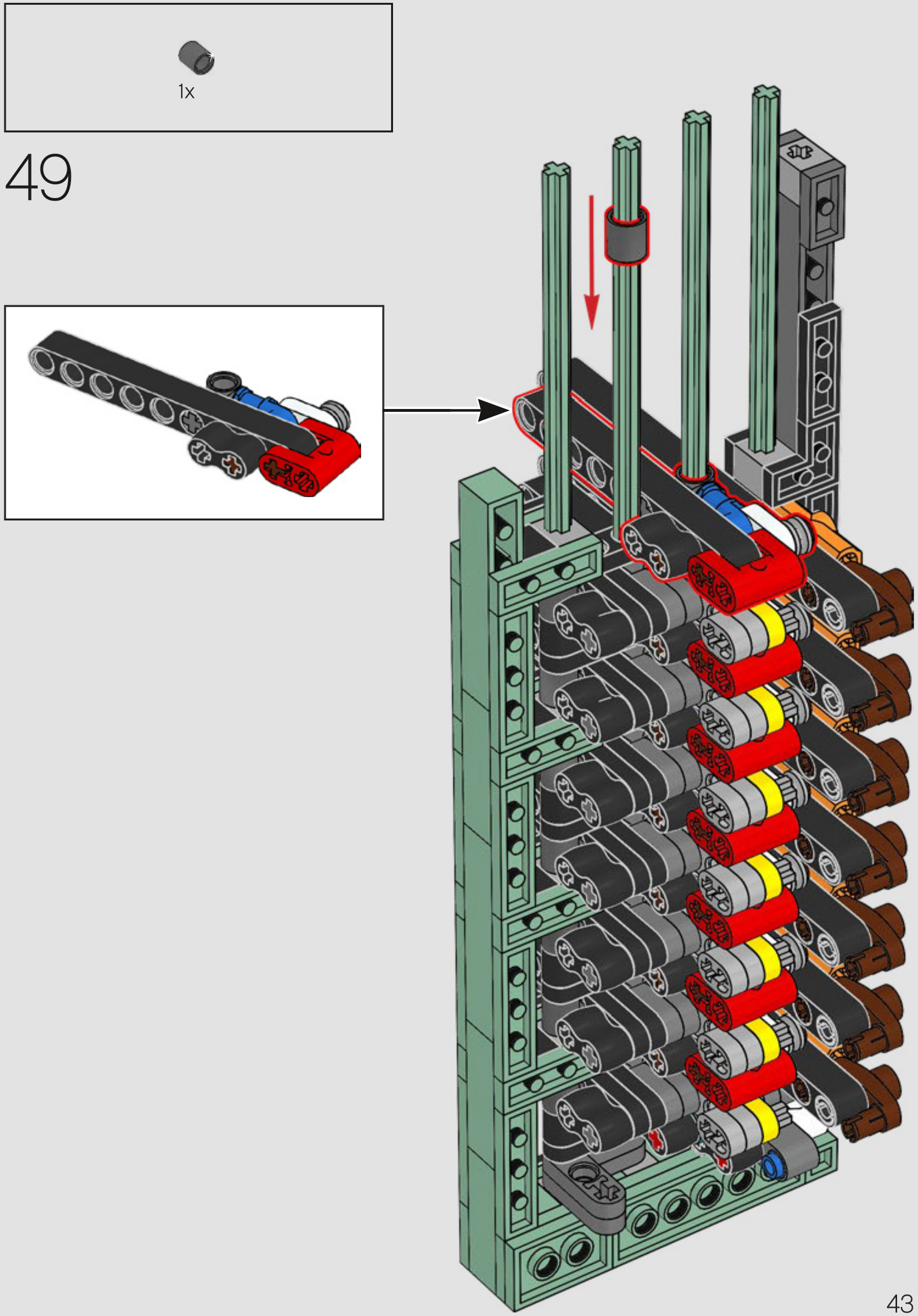

50

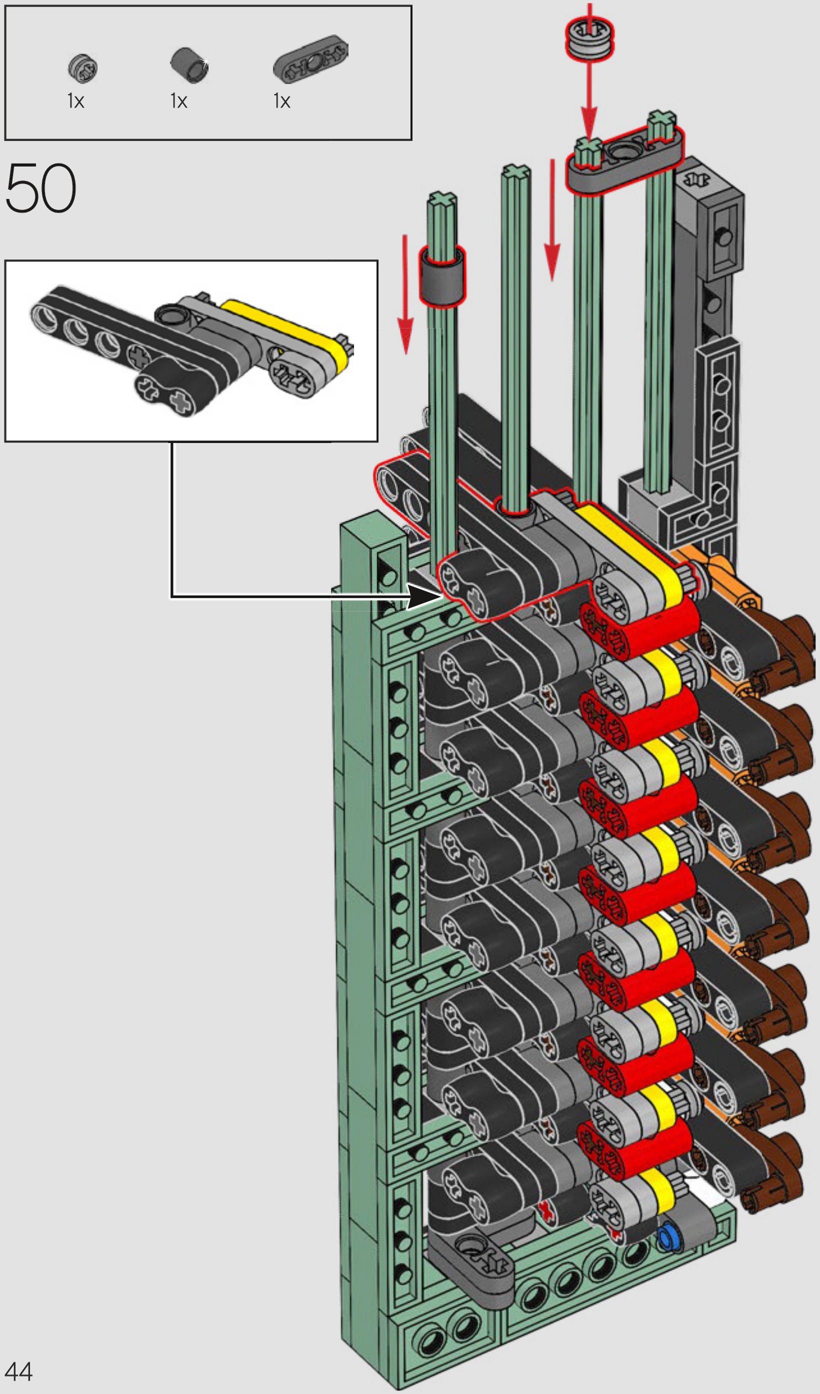

51

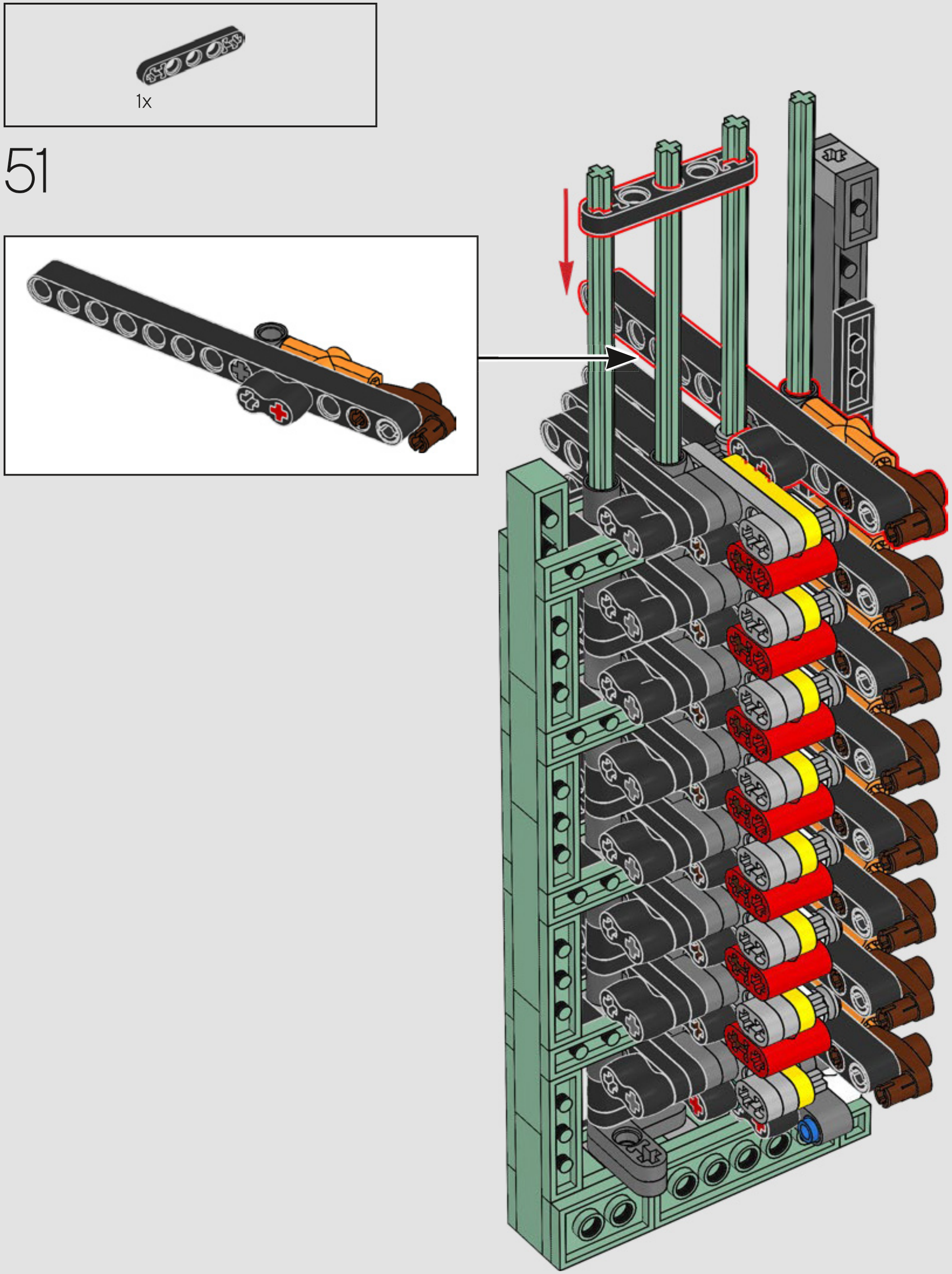

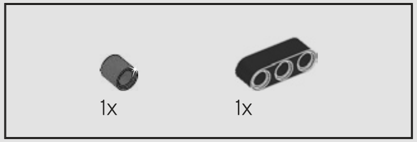

52

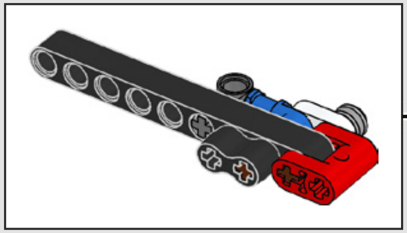

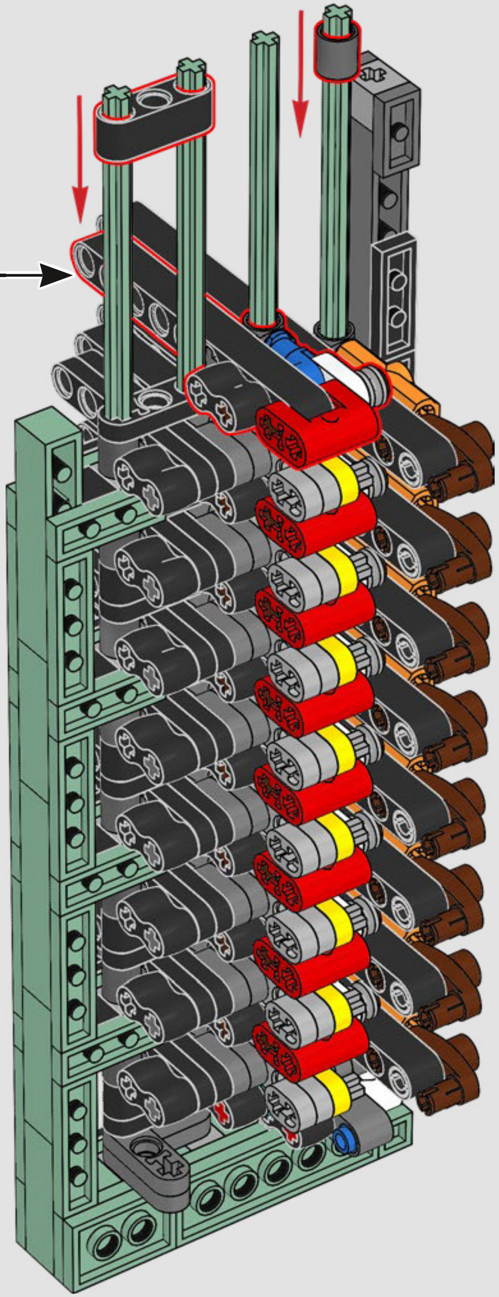

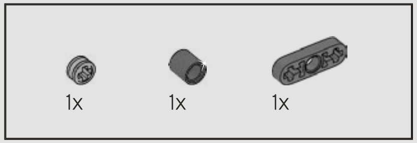

53

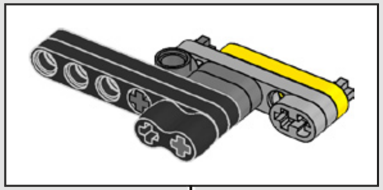

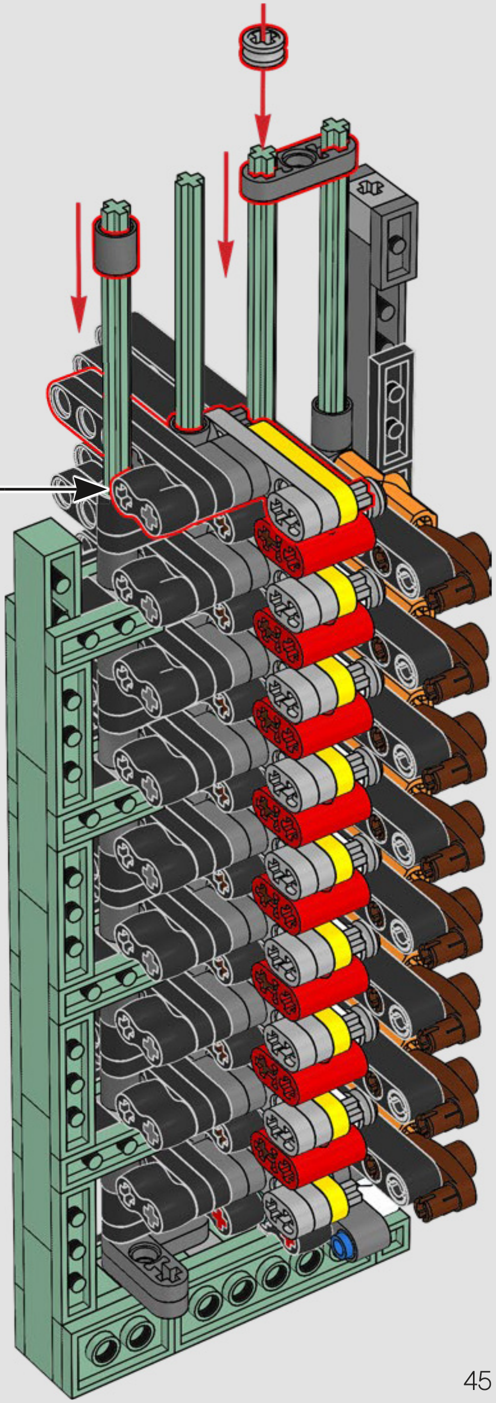

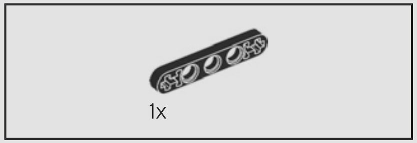

54

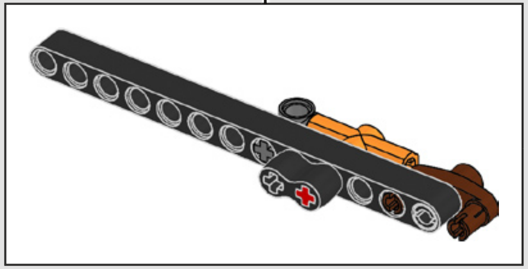

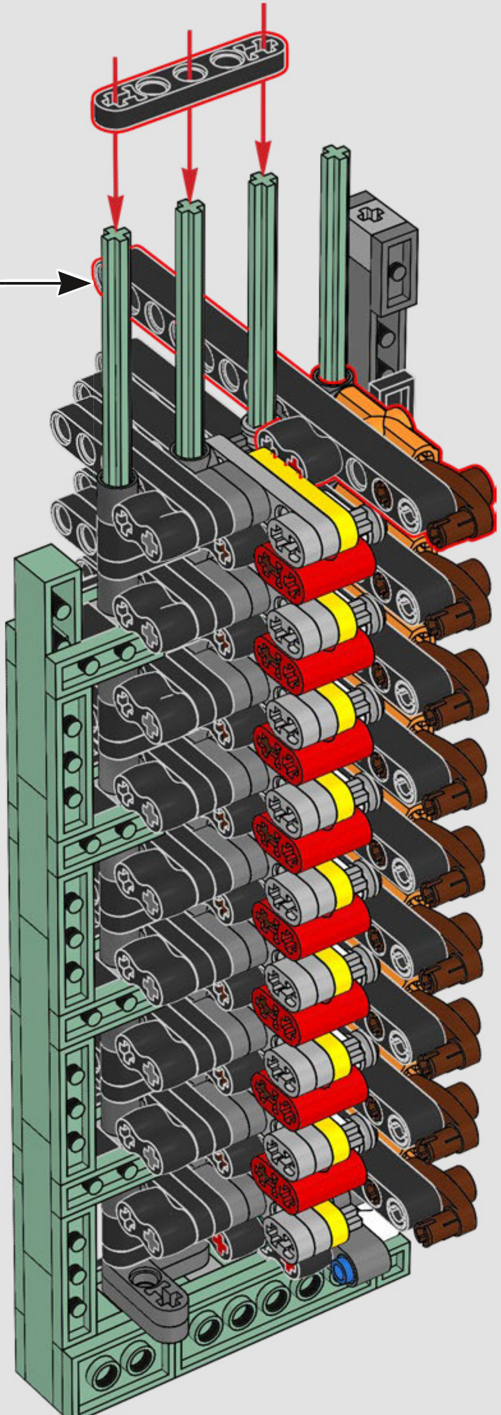

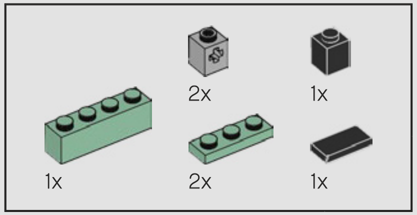
2x
1x
1x
2x
1x

55

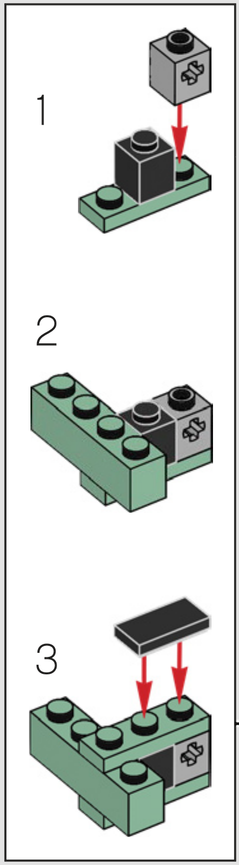

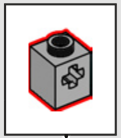

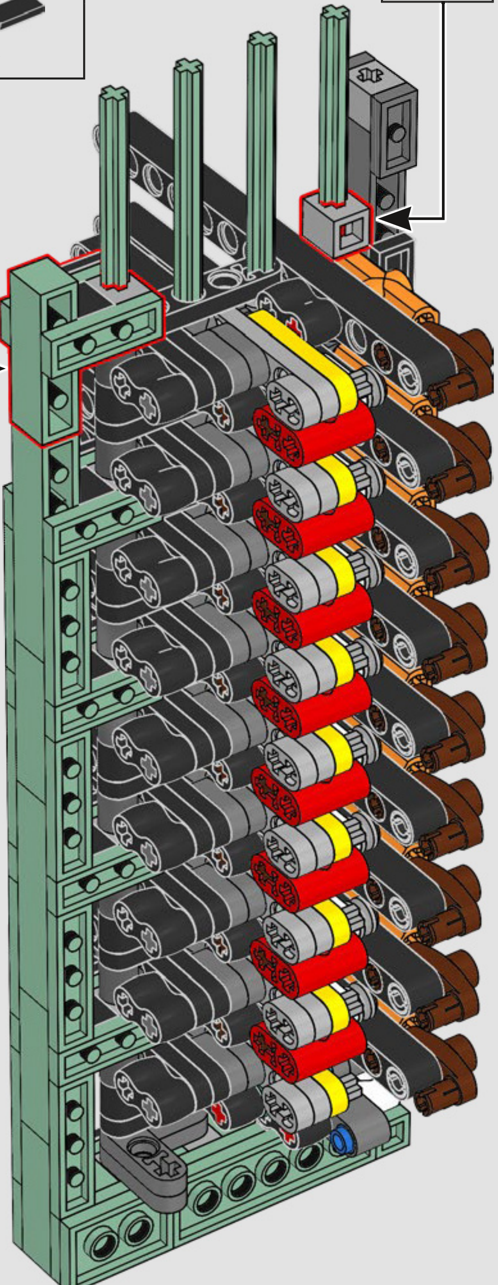

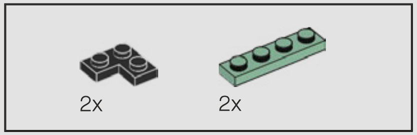

56

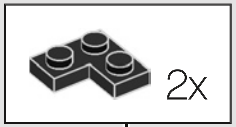

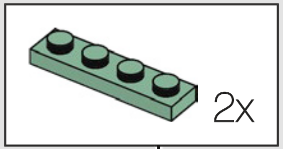

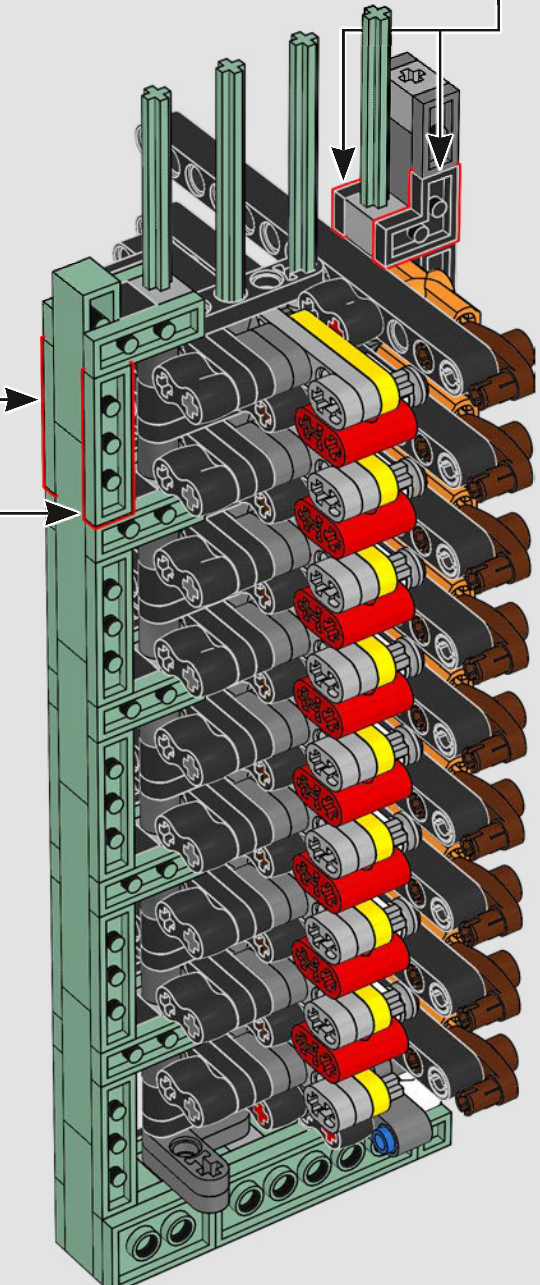

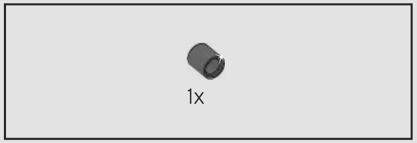

57

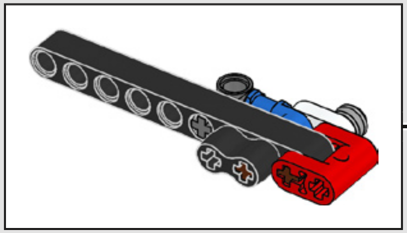

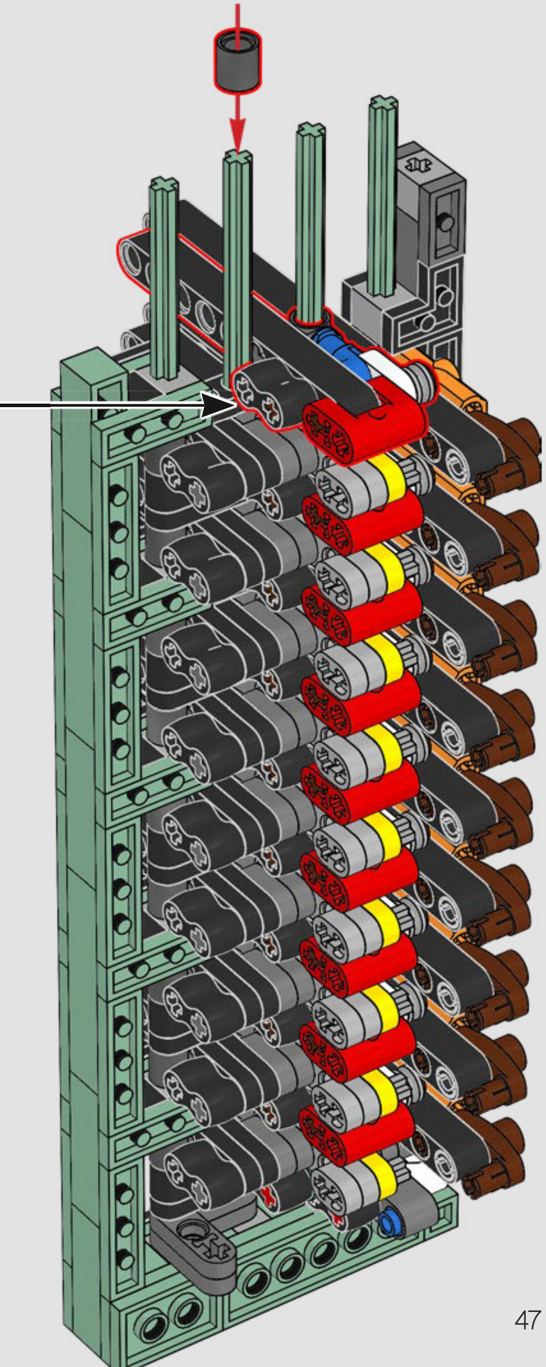

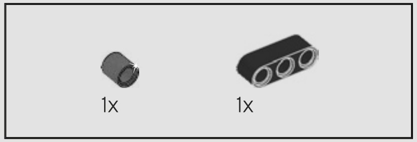

58

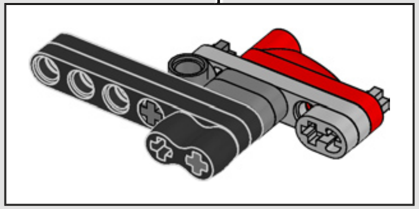

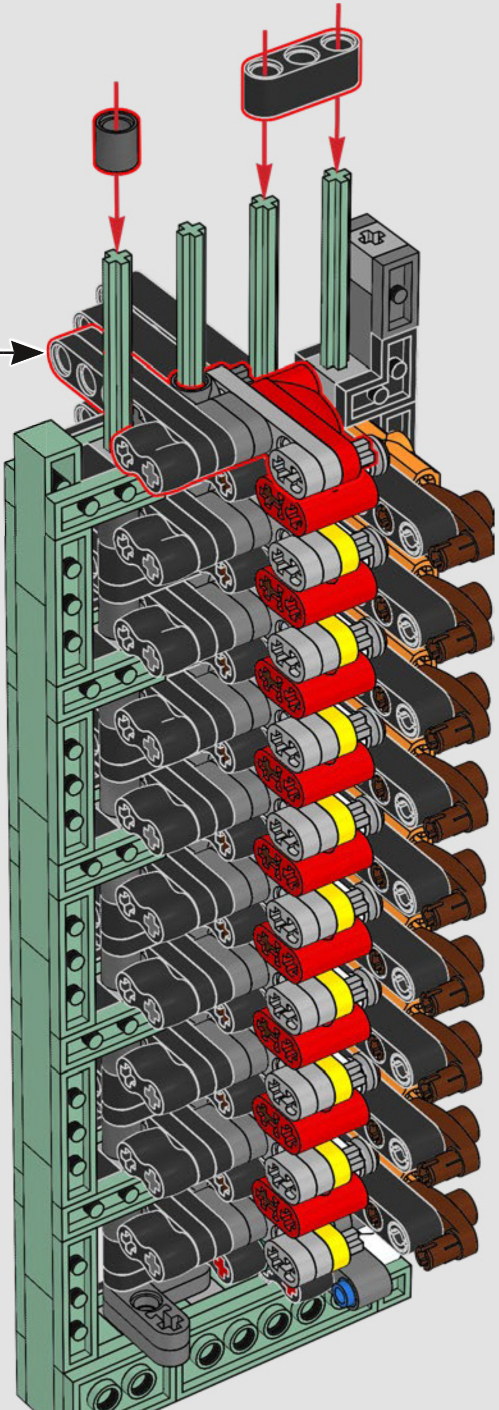

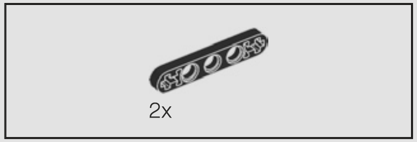

59

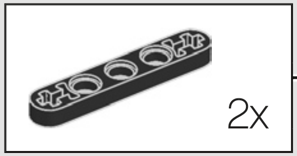

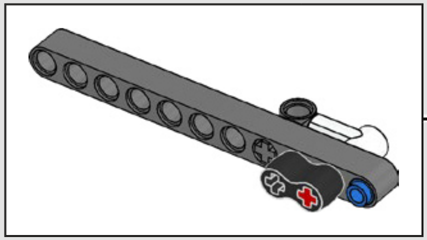

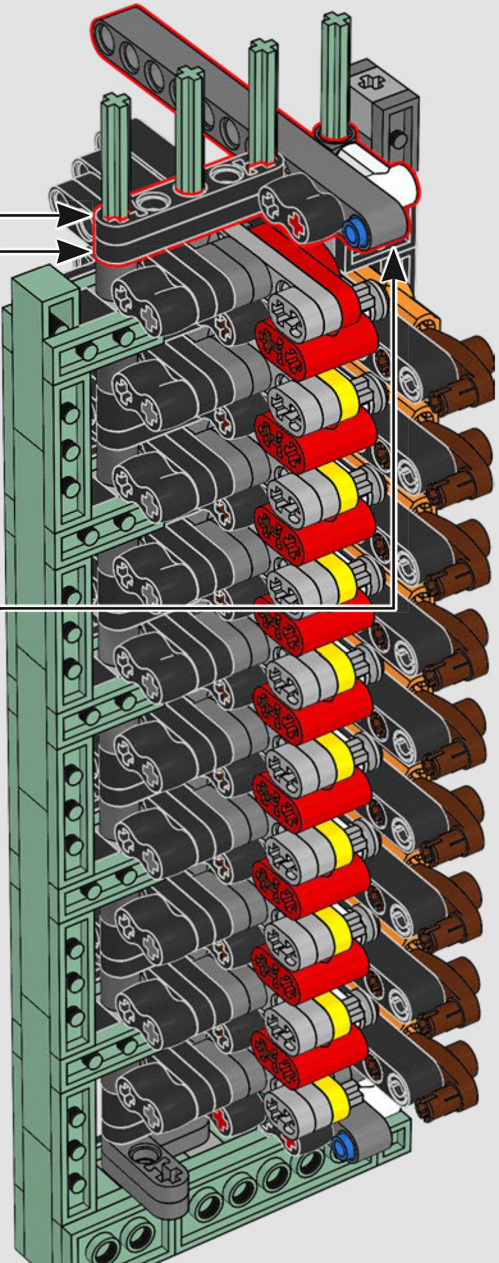

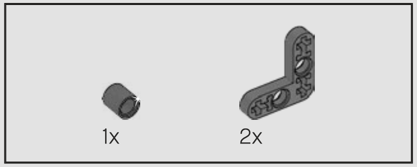

60

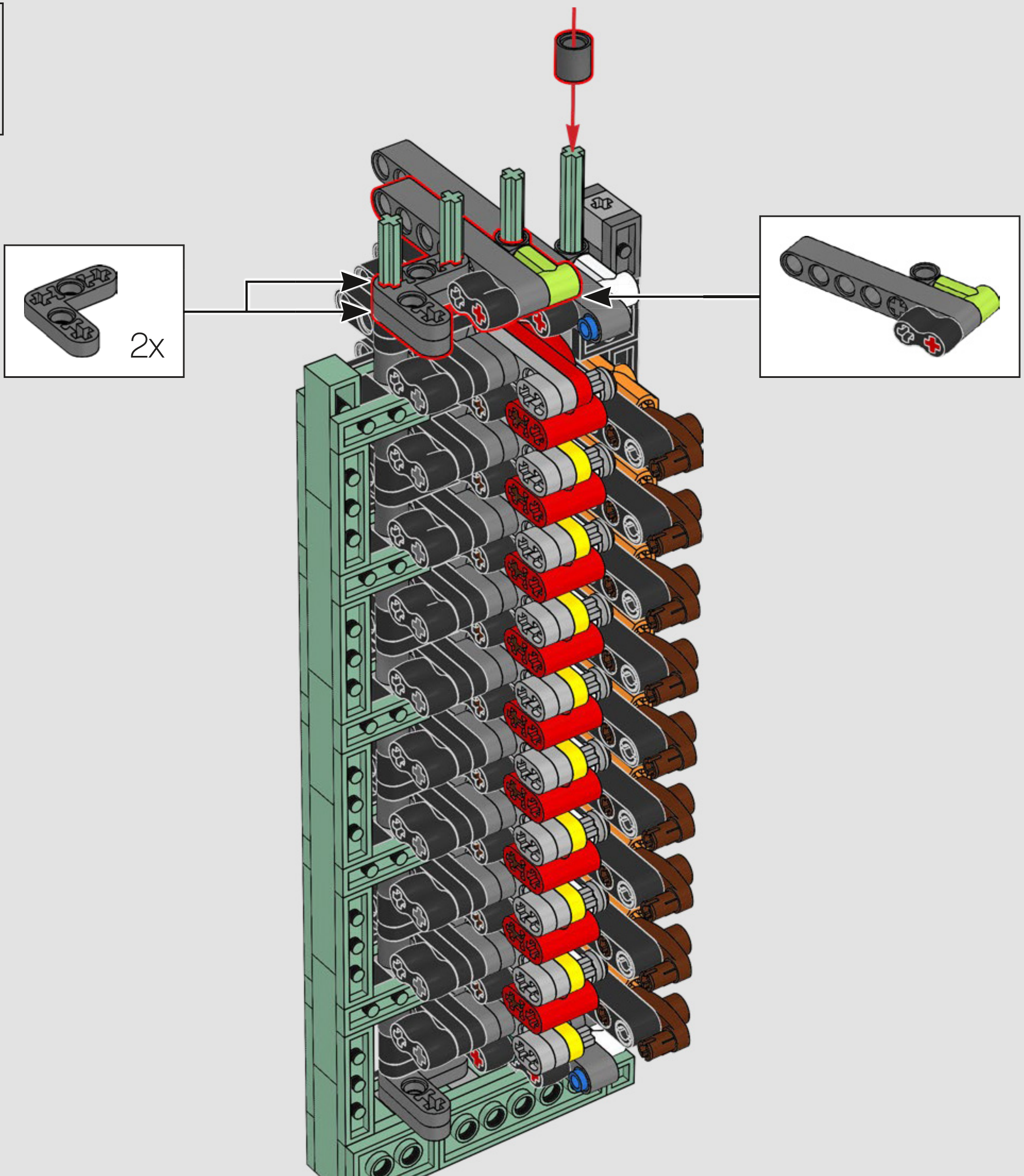

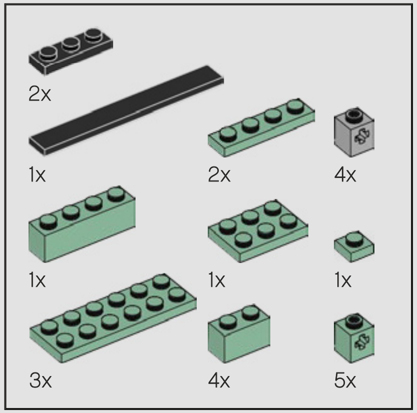
2x
1x
2x
4x
1x
1x
1x
3x
4x
5x

61

1

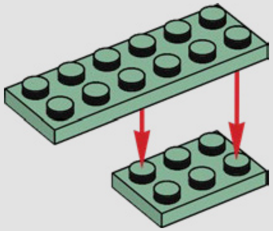

2

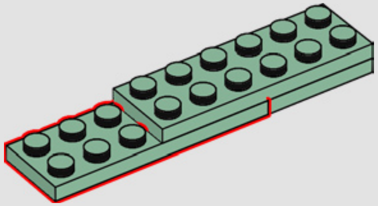

3

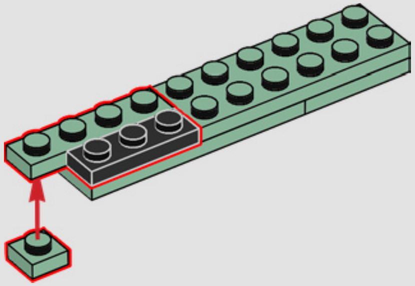

4

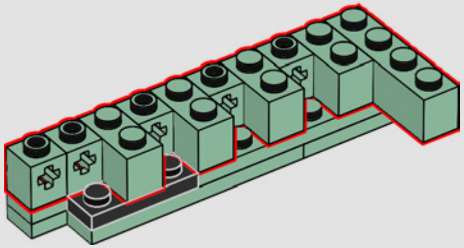

5

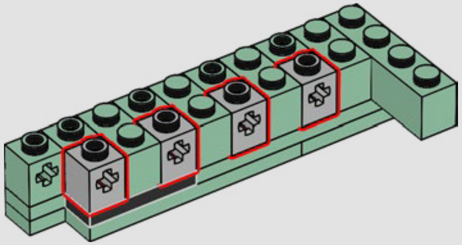

6

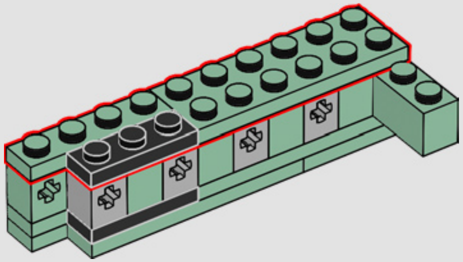

7

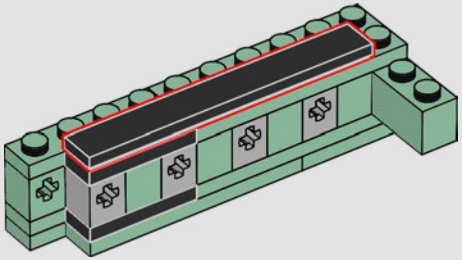

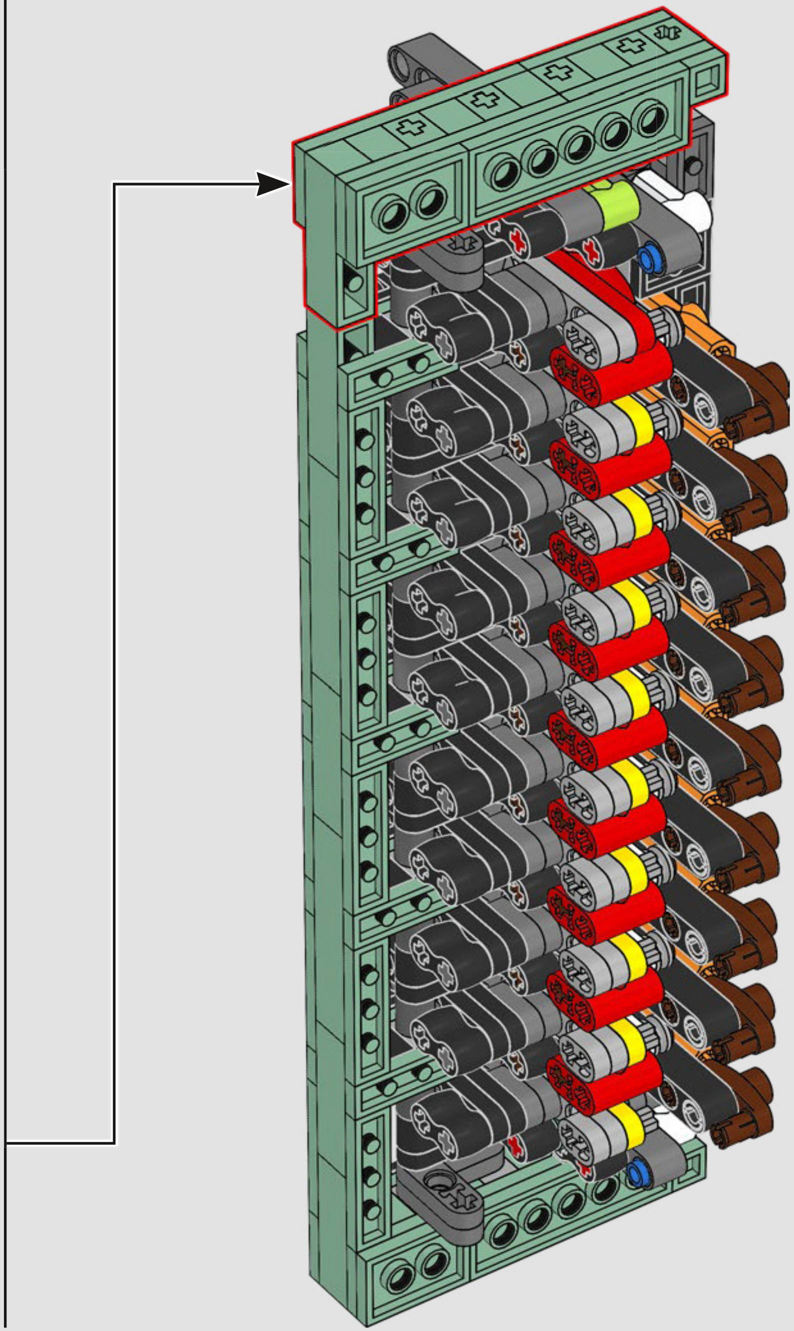

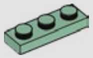

2x

62

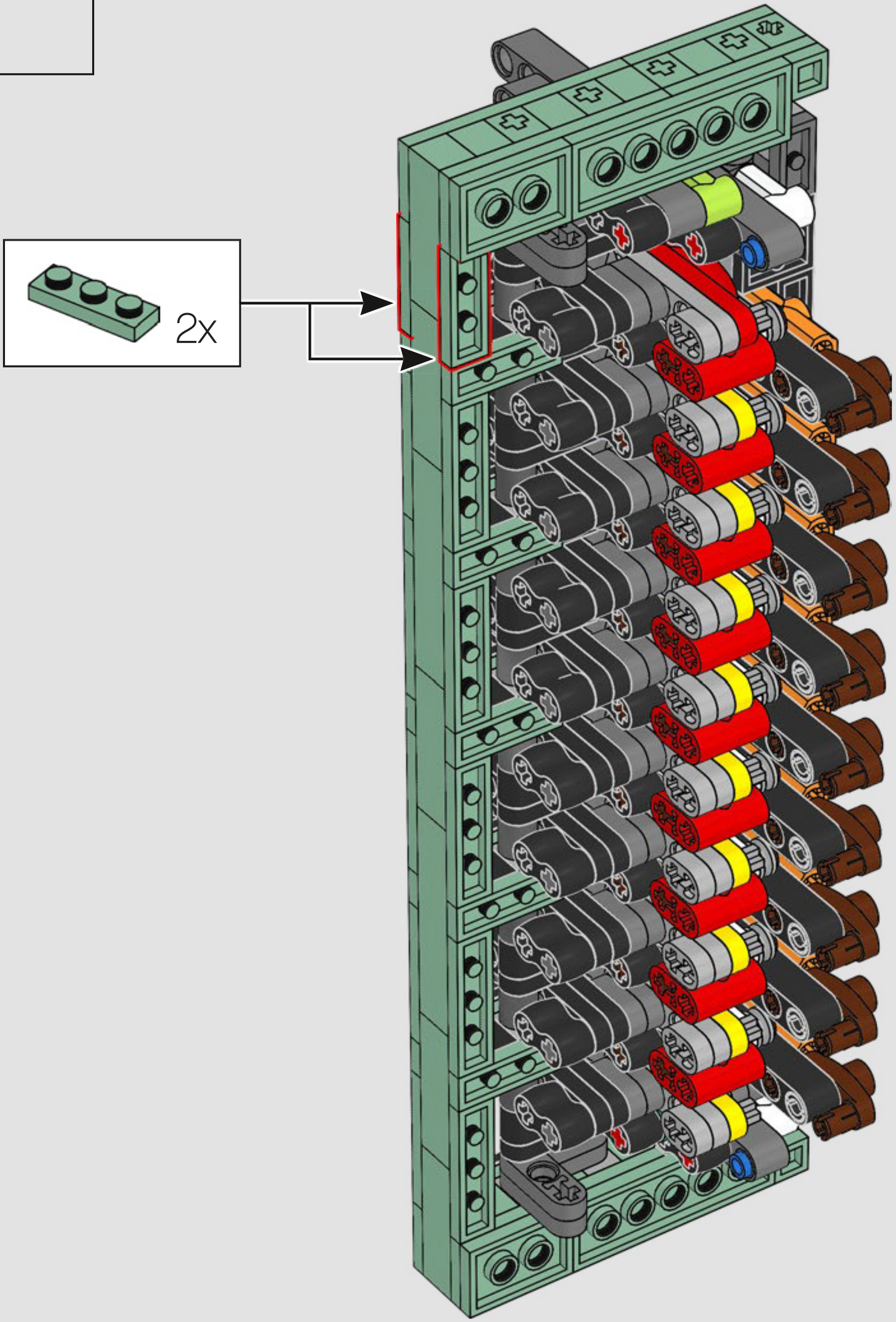

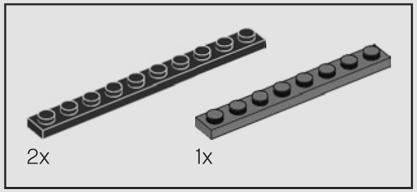

63

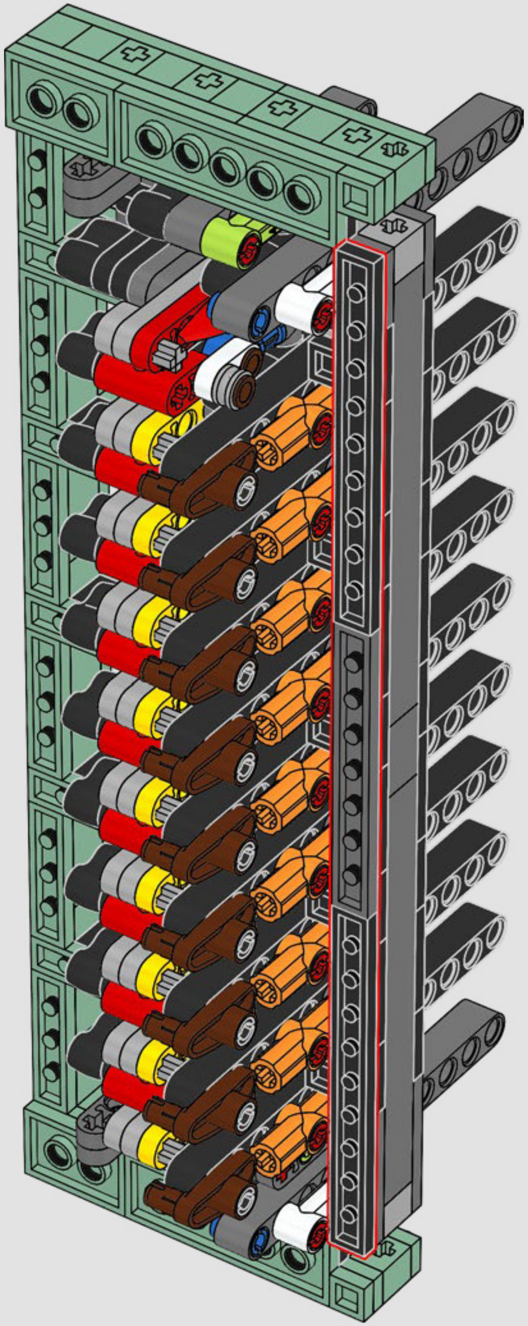

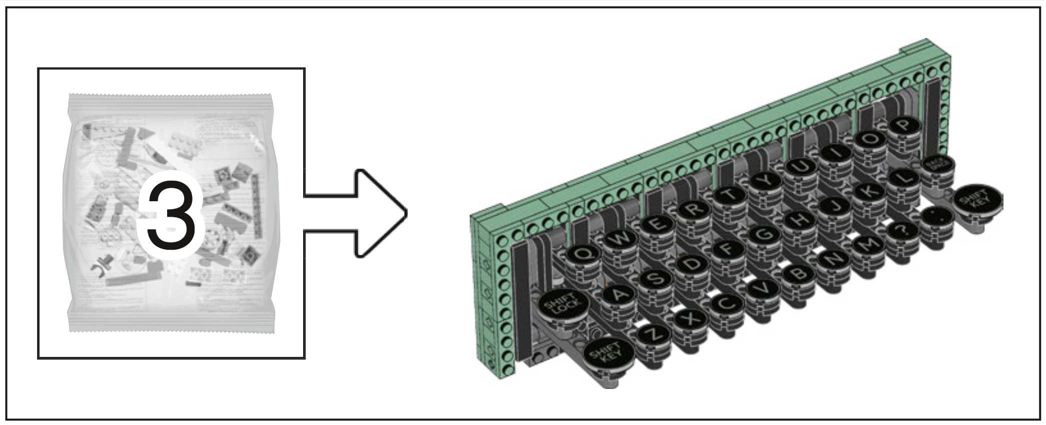
3

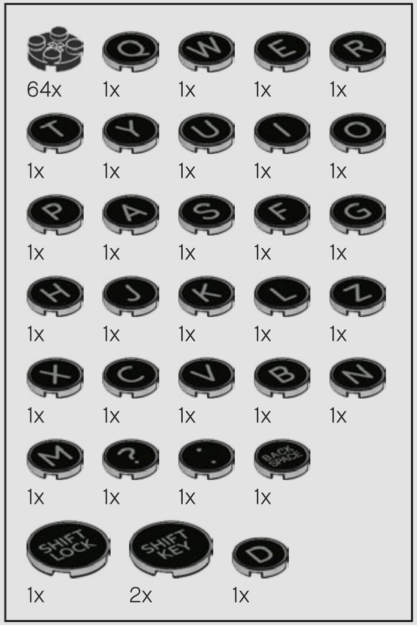
64x
1x
1x
1x
1x
1x
1x
1x
1x
1x
1x
1x
1x
1x
1x
1x
1x
1x
1x
1x
1x
1x
1x
1x
1x
1x
1x
1x
1x
1x
1x
2x
1x

64

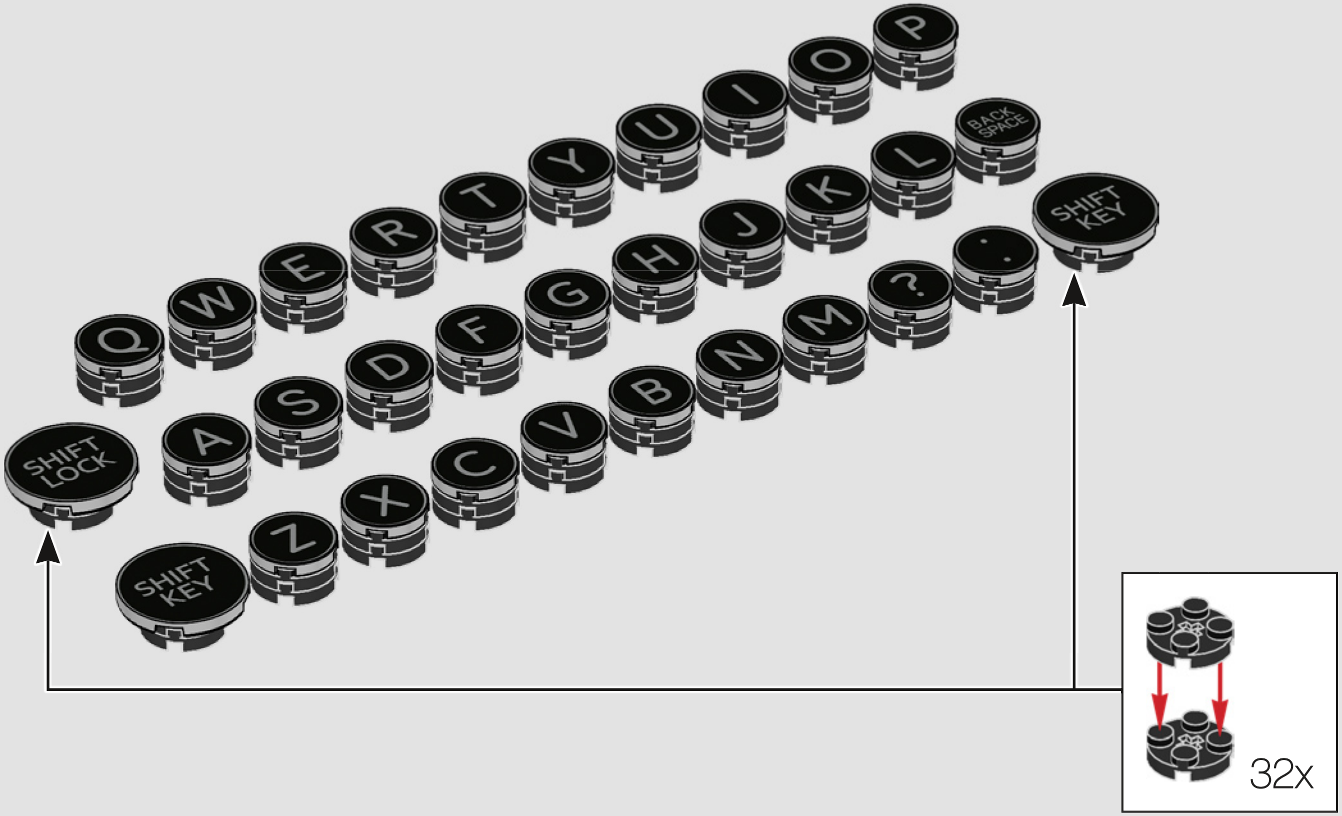
32x

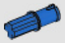

32x

65

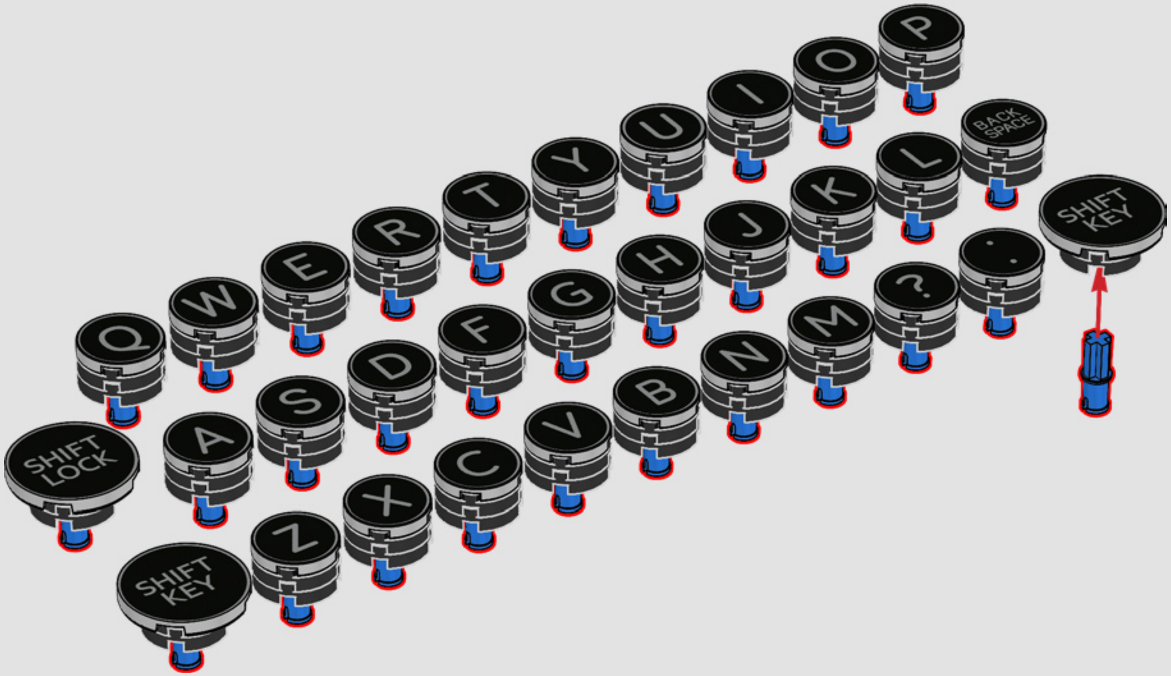

Q
W
E
R
T
Y
U
I
O
P
BACK SPACE
SHIFT LOCK
A
S
D
F
G
H
J
K
L
SHIFT KEY
Z
X
C
V
B
N
M
?
.
SHIFT KEY

66

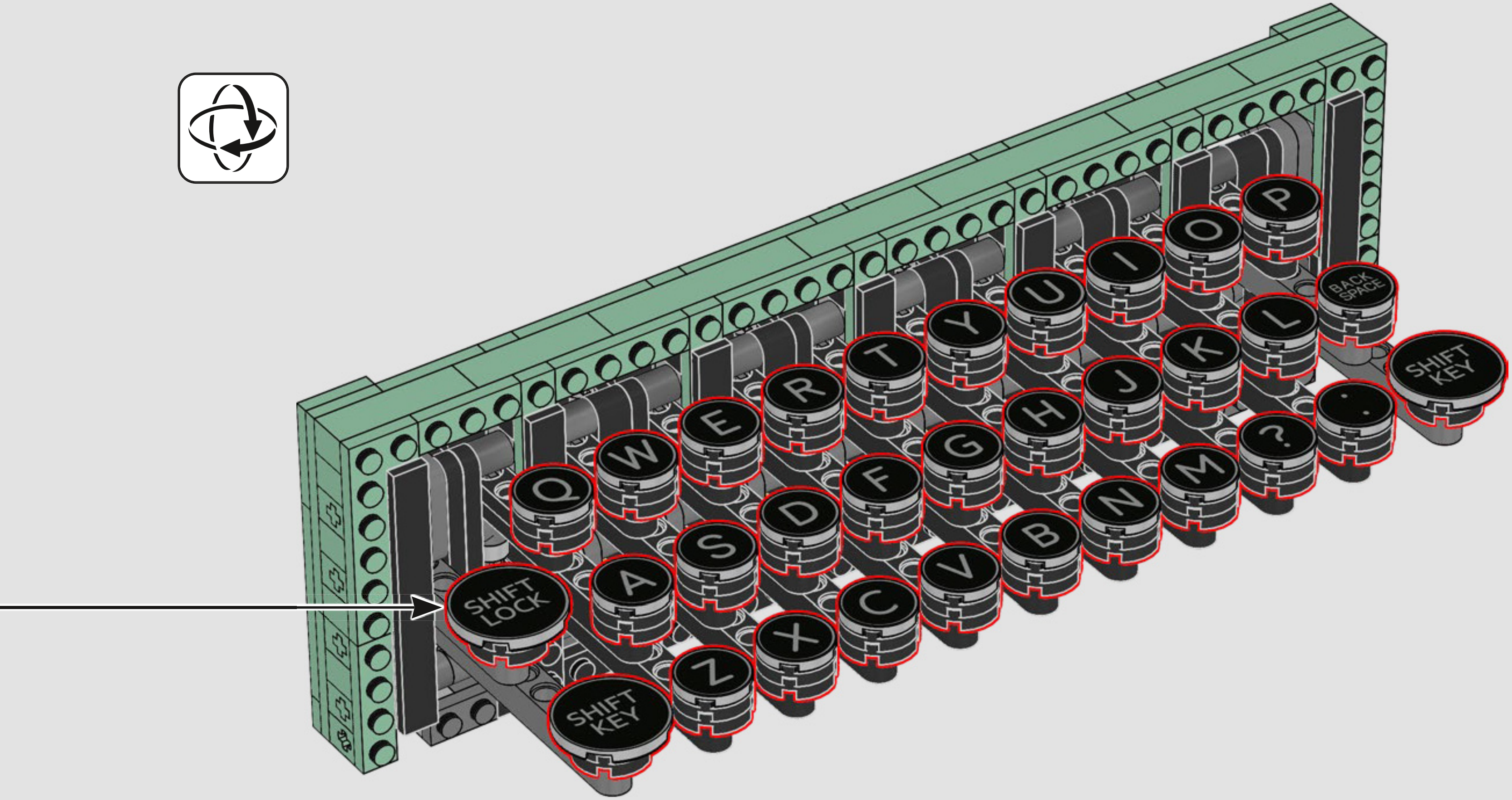
Q
W
E
R
T
Y
U
I
O
P
A
S
D
F
G
H
J
K
L
BACK SPACE
SHIFT LOCK
Z
X
C
V
B
N
M
?
.
SHIFT KEY
SHIFT KEY

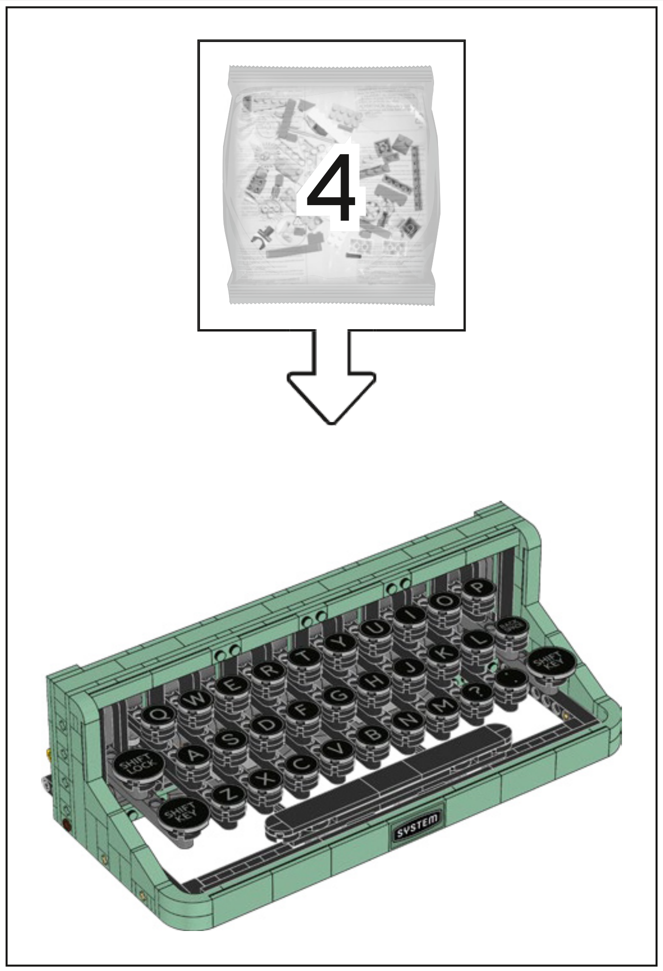
4
SHIFT LOCK
SHIFT KEY
SYSTEM

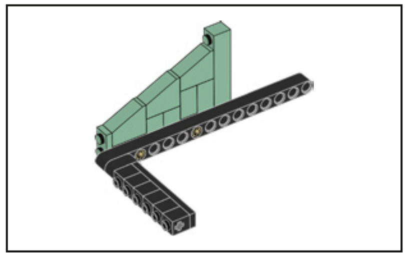

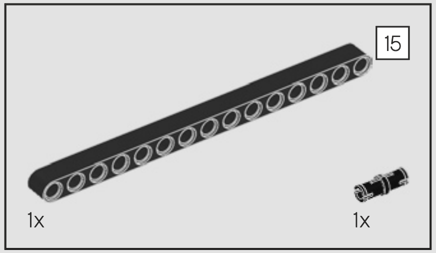

67

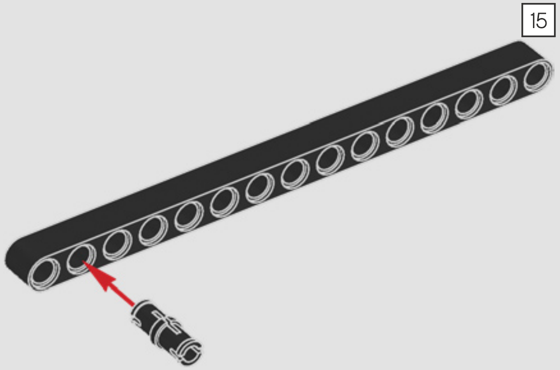

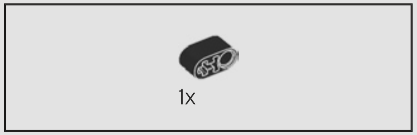

68

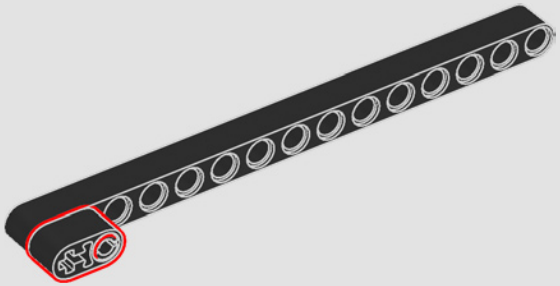

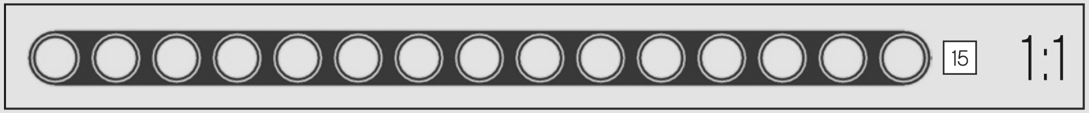

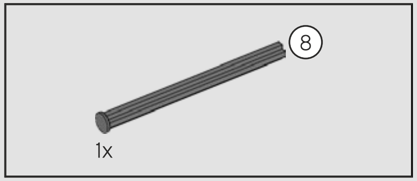

69

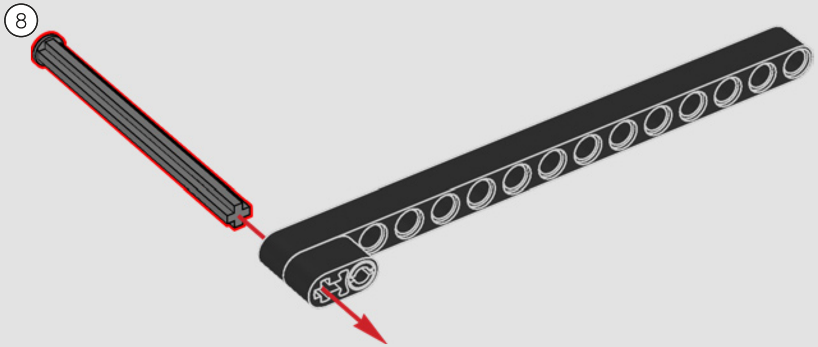

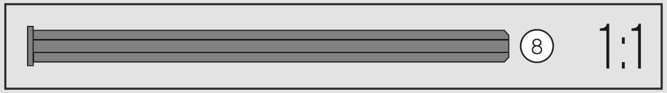

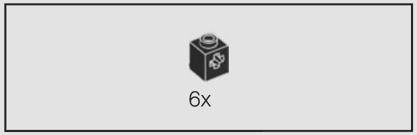

70

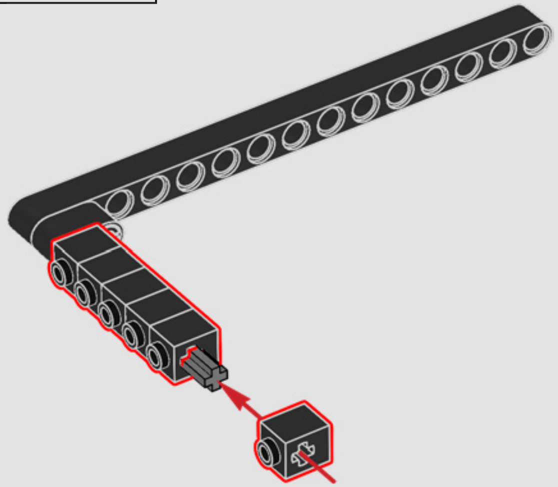

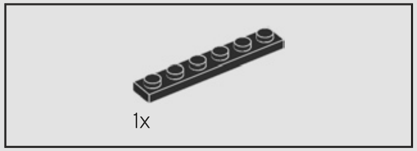

71

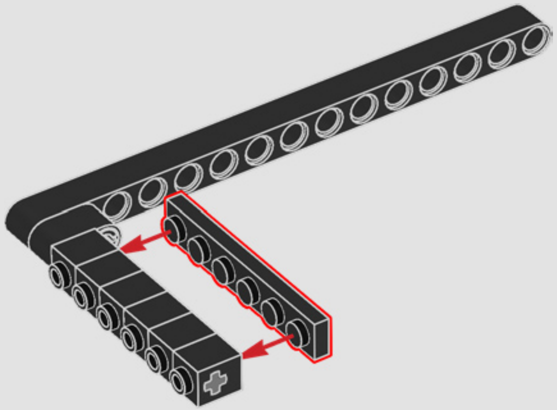

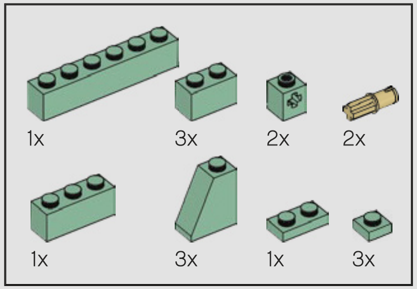
1x
3x
2x
2x
1x
3x
1x
3x

72

1

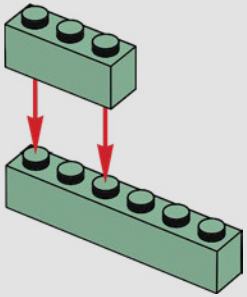

2

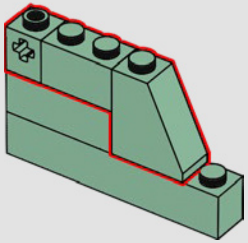

3

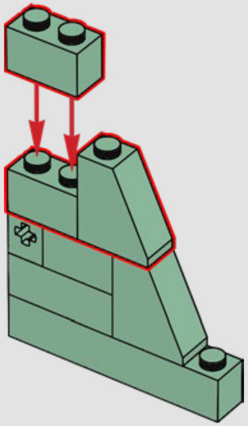

4

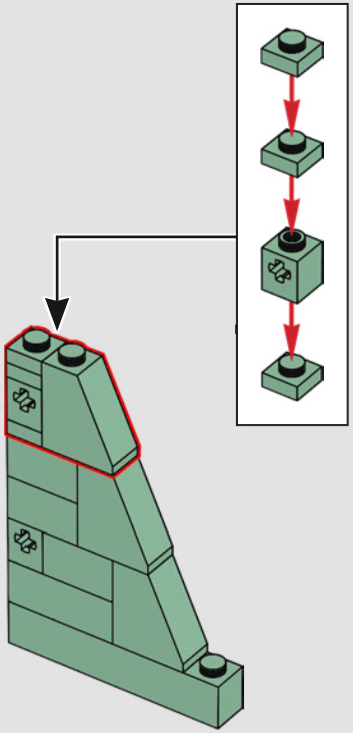

5

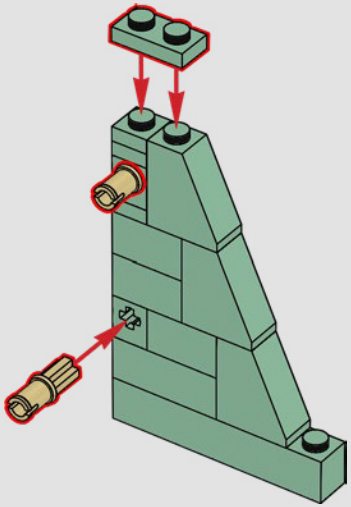

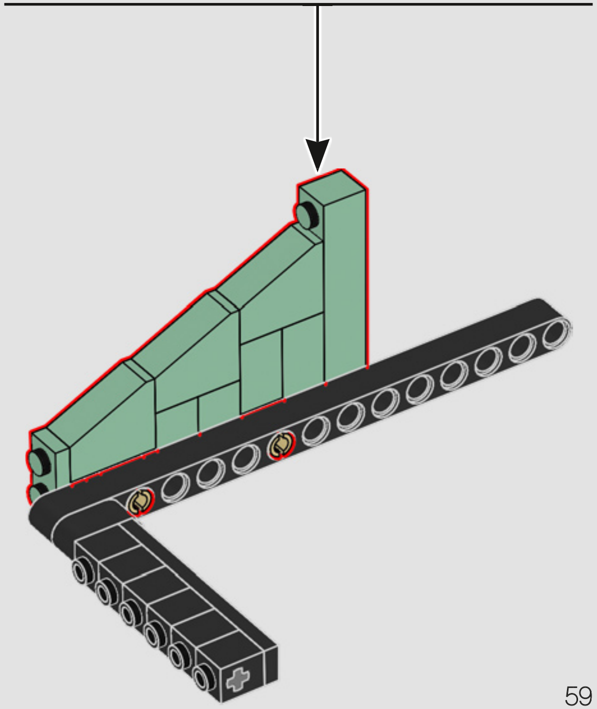

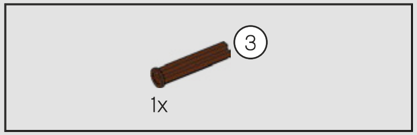

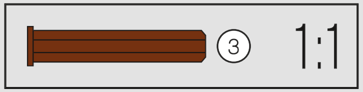

73

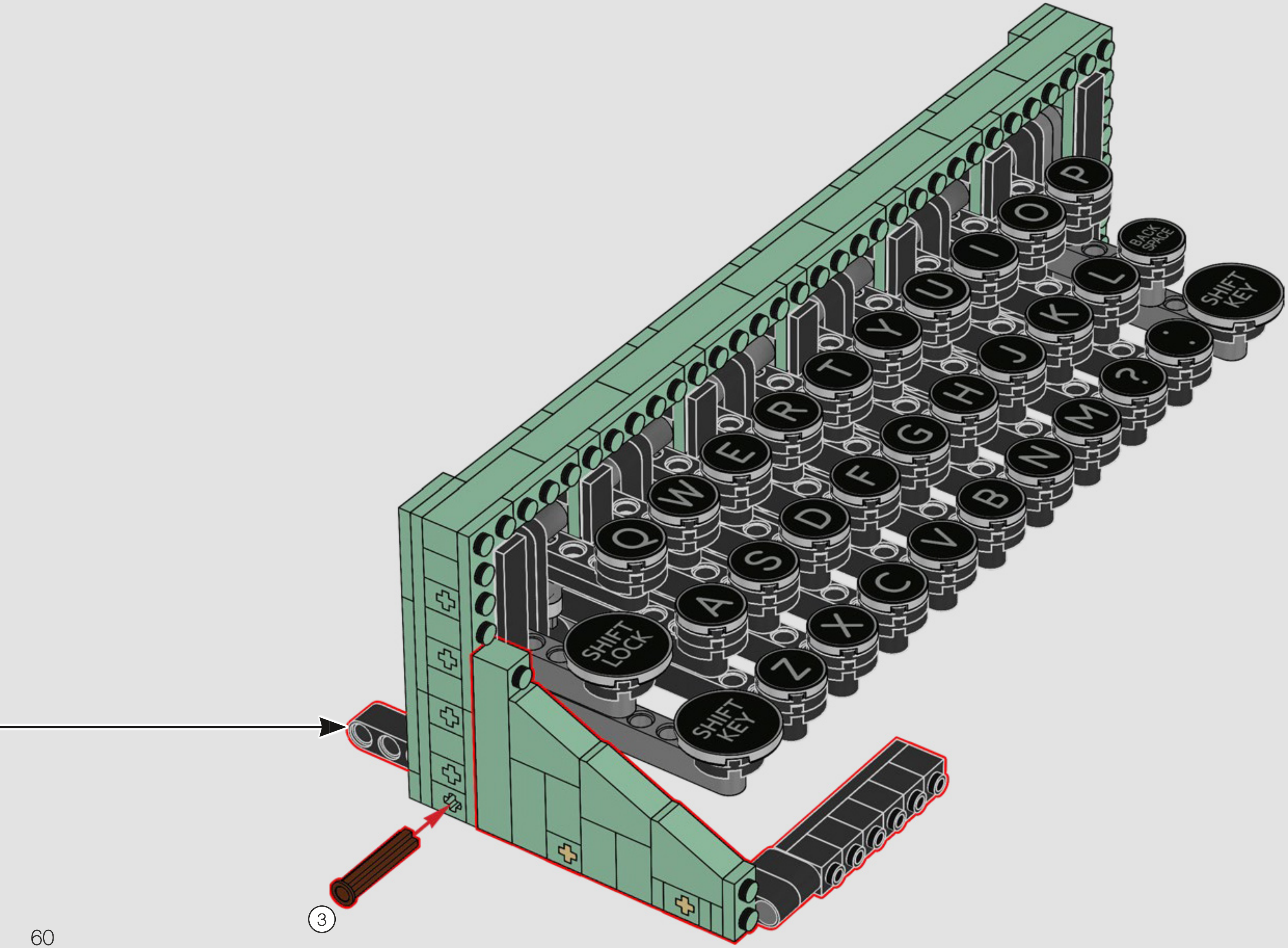
③
SHIFT LOCK
SHIFT KEY
BACK SPACE
SHIFT KEY

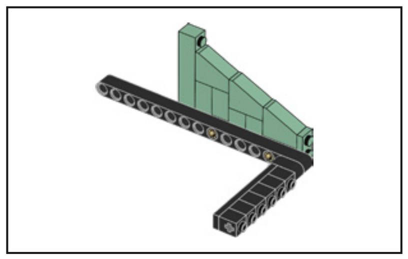

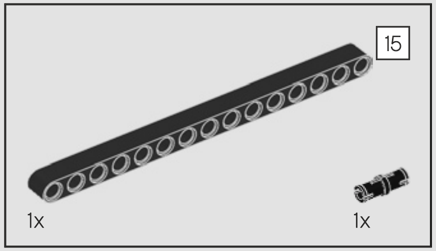

74

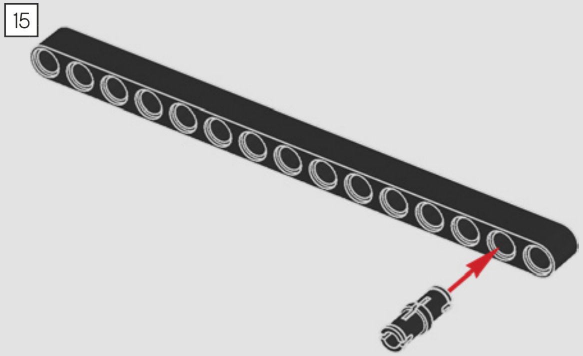

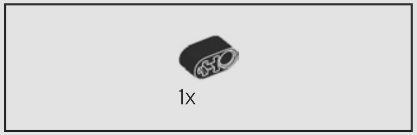

75

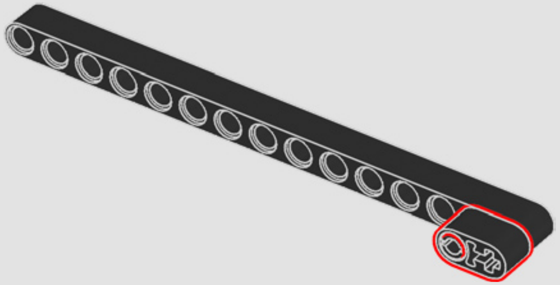

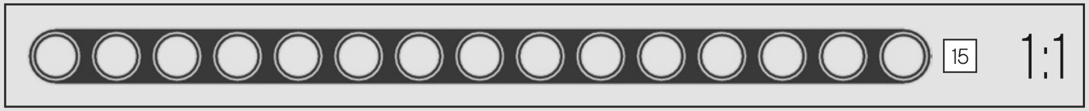

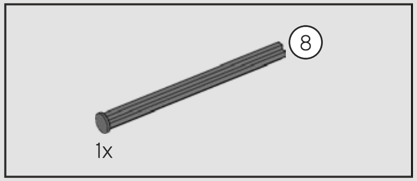

76

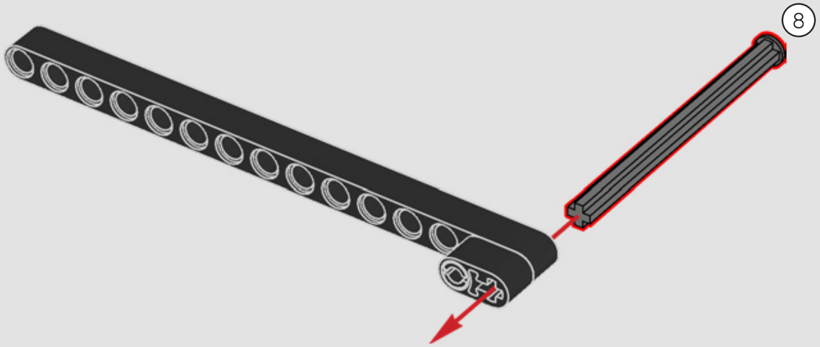

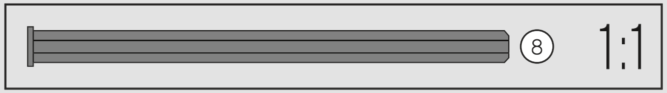

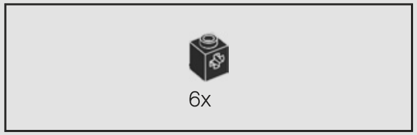

77

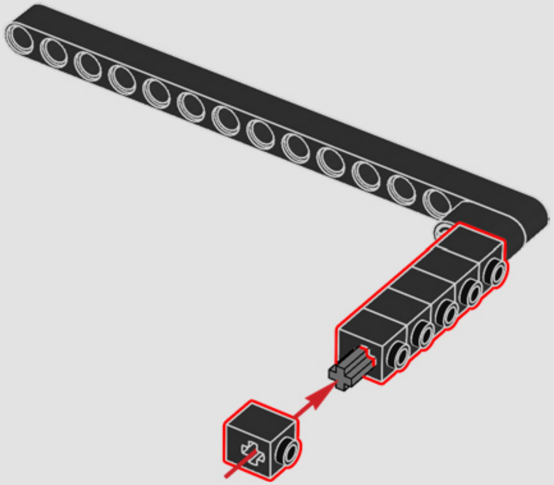

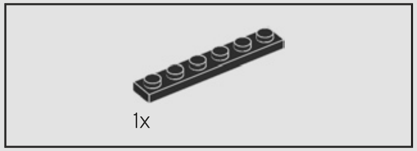

78

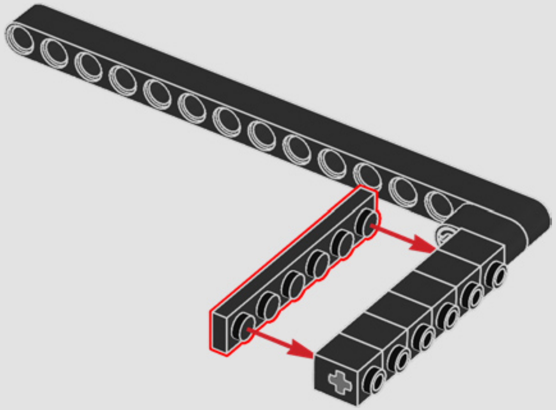

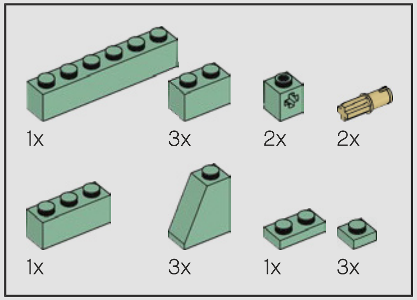
1x
3x
2x
2x
1x
3x
1x
3x

79

1

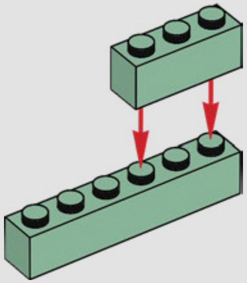

2

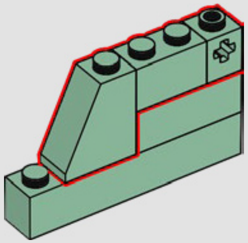

3

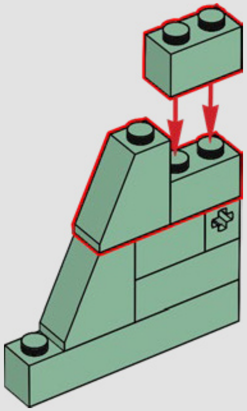

4

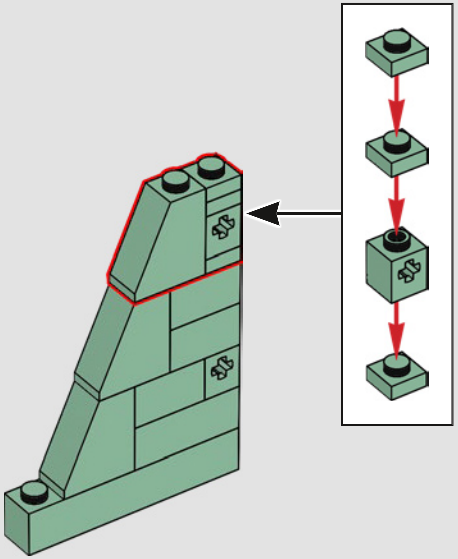

5

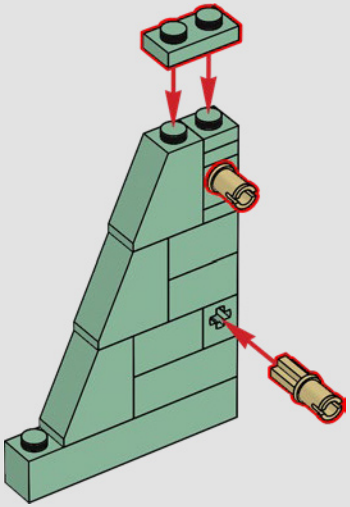

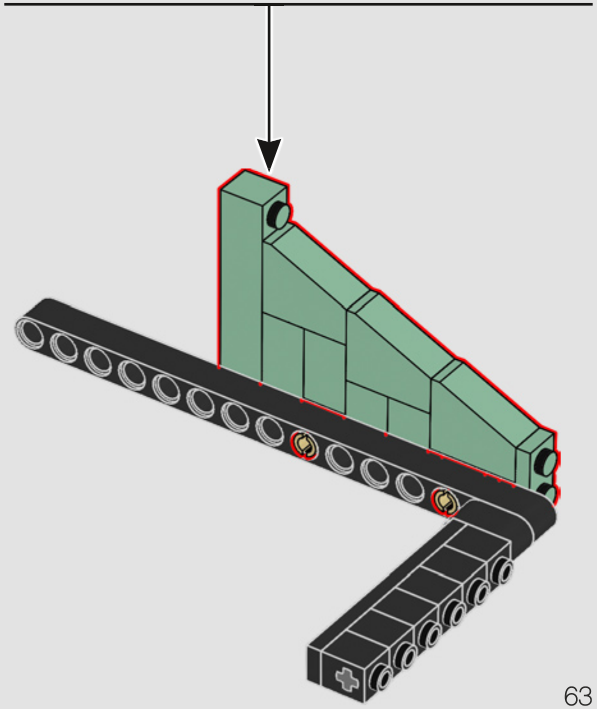

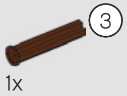
③
1x

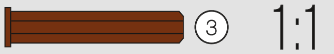
③
1:1

80

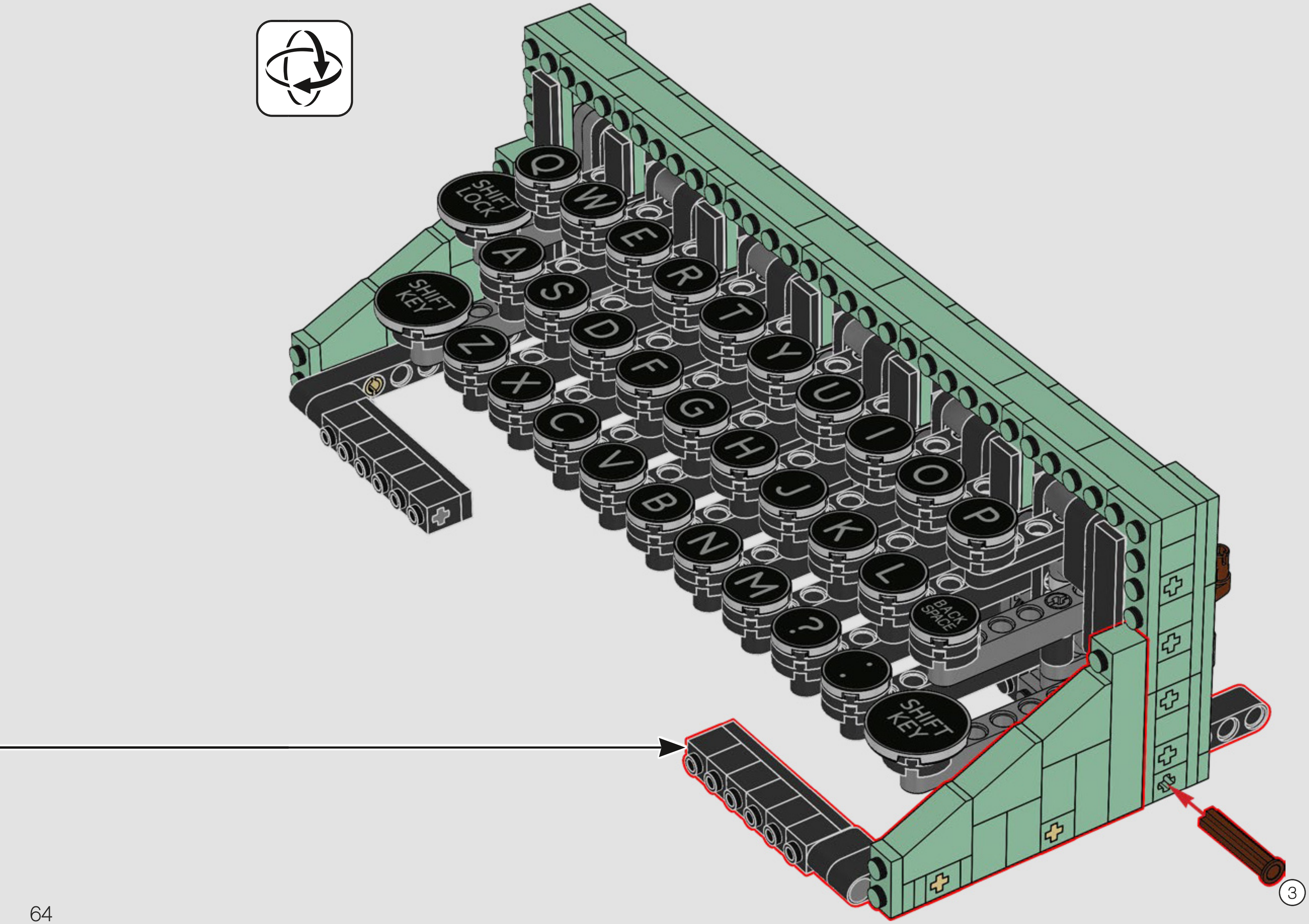
Q
W
E
R
T
Y
U
I
O
P
A
S
D
F
G
H
J
K
L
Z
X
C
V
B
N
M
?
.
SHIFT LOCK
SHIFT KEY
SHIFT KEY
BACK SPACE
③

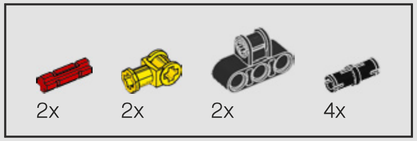

81

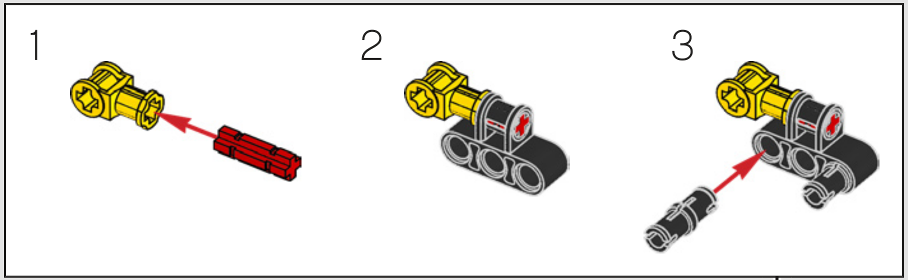

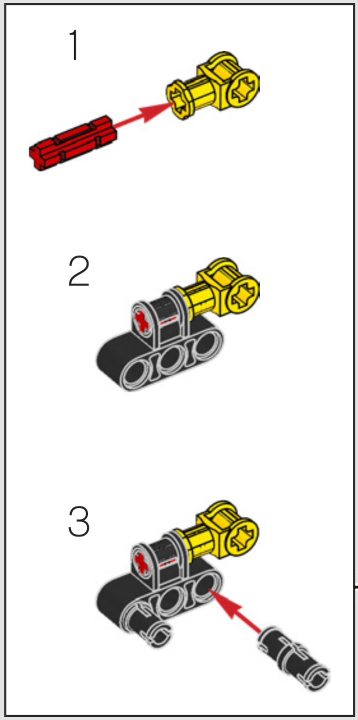

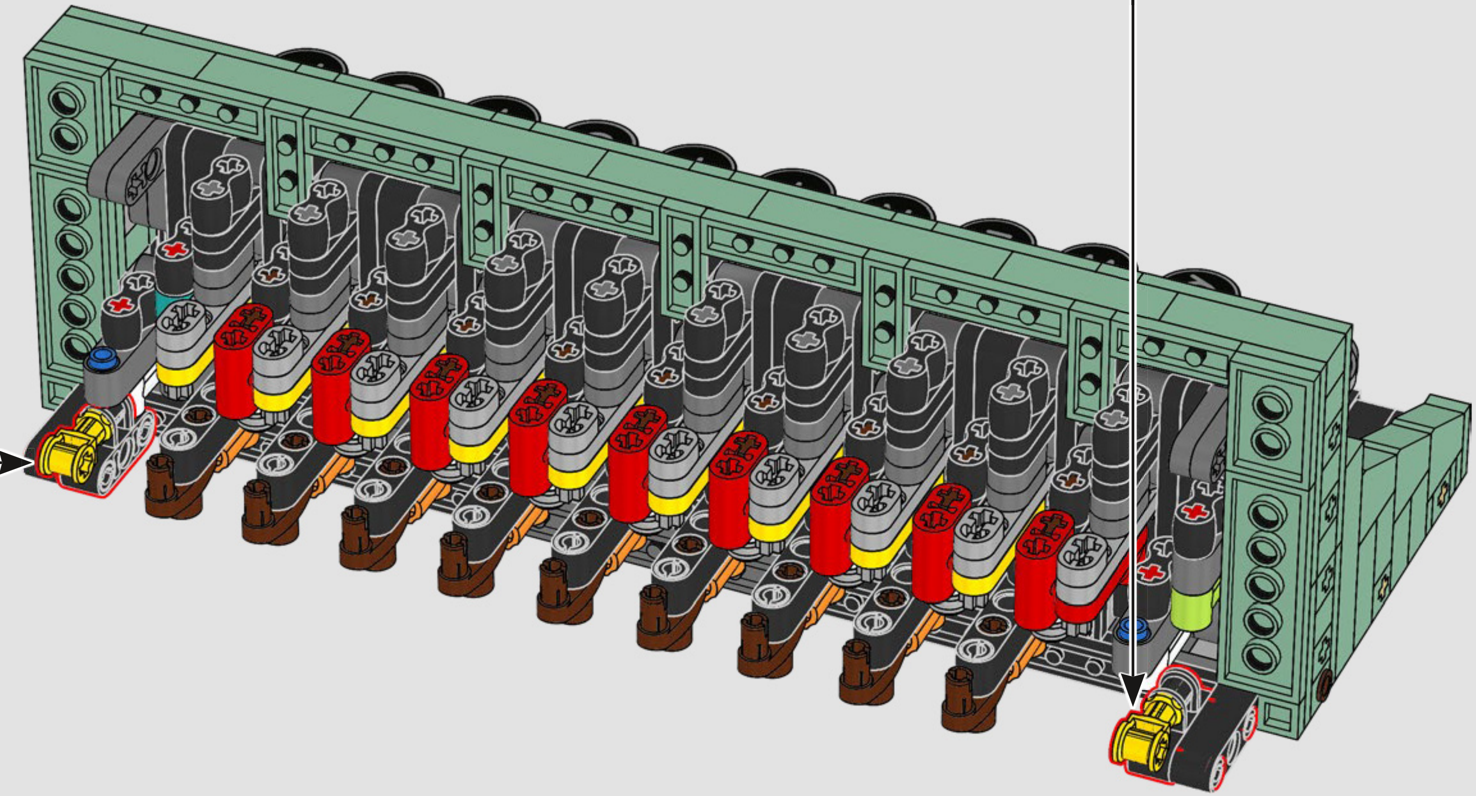

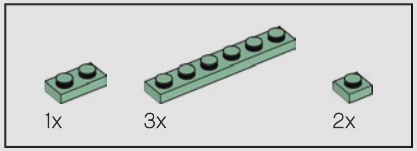

82

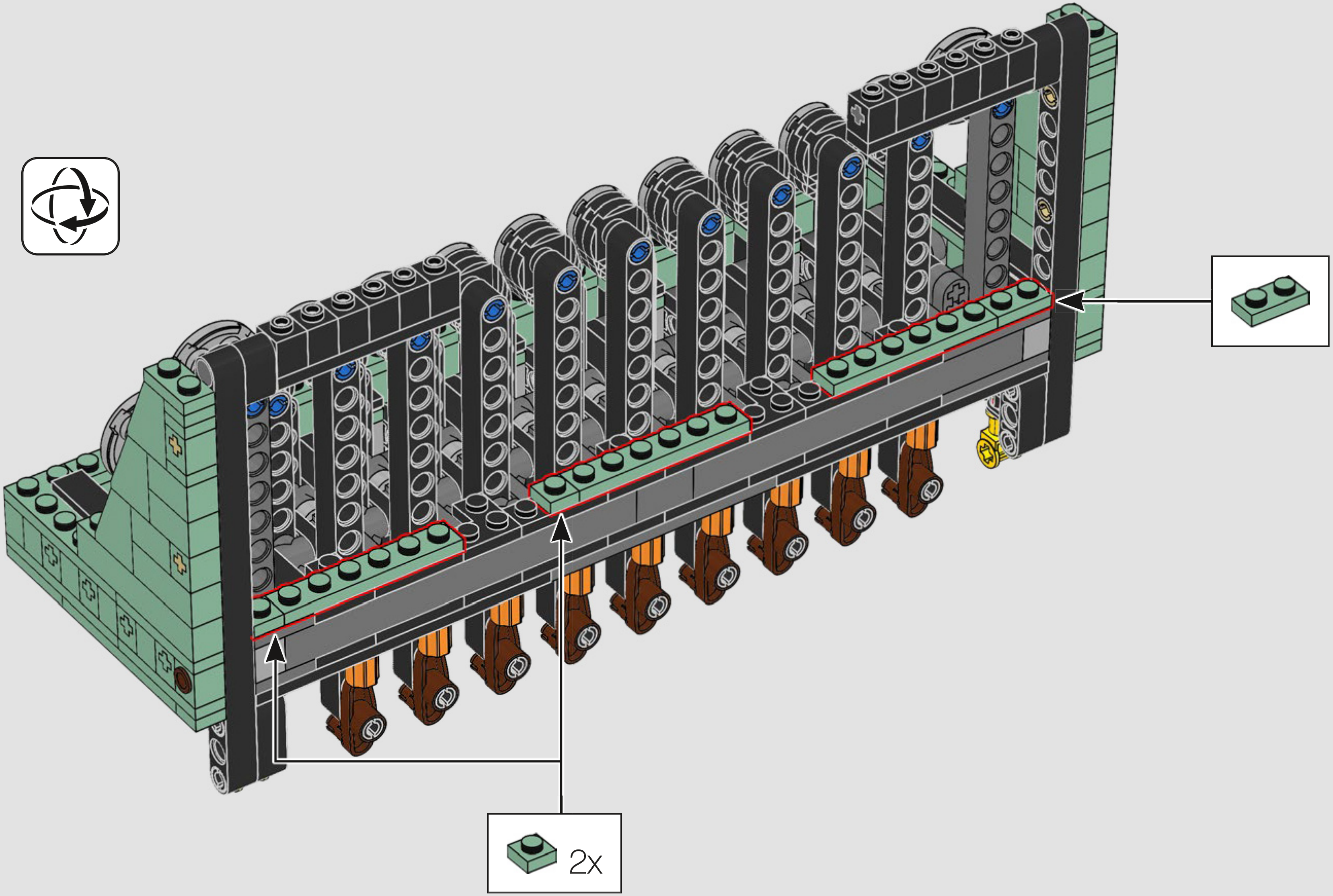

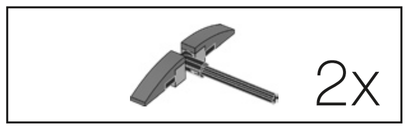

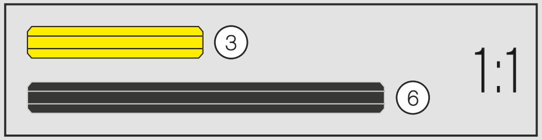

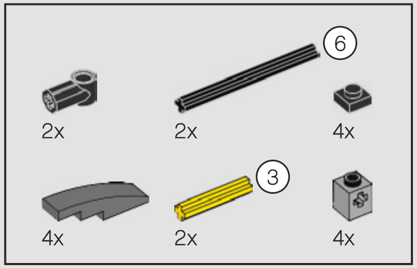
6
2x
2x
4x
3
4x
2x
4x

83

1

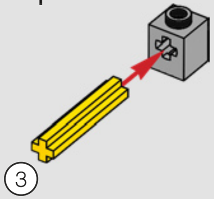

2

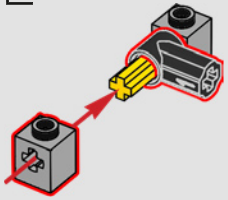

3

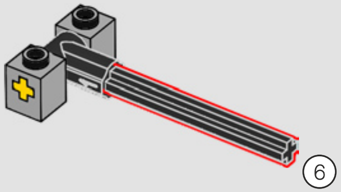

4

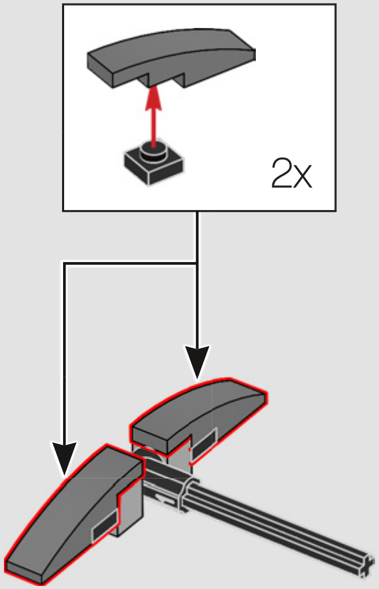

2x

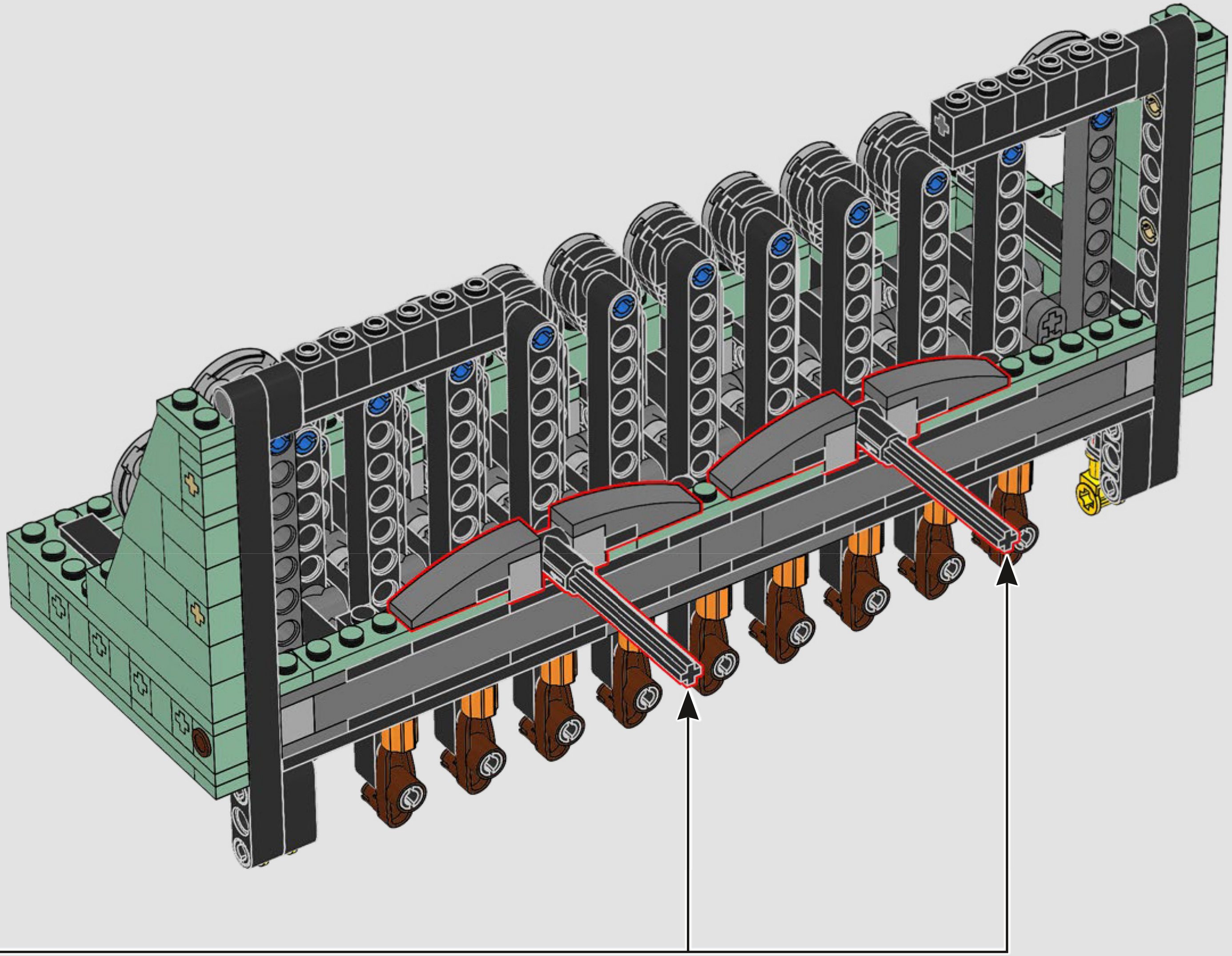

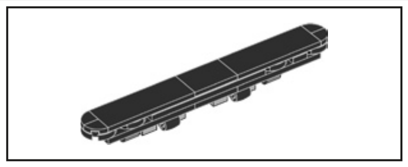

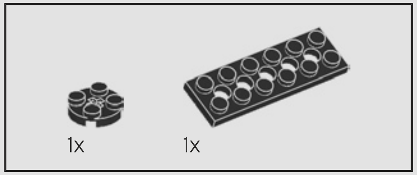

84

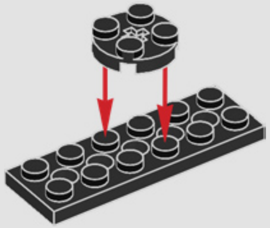

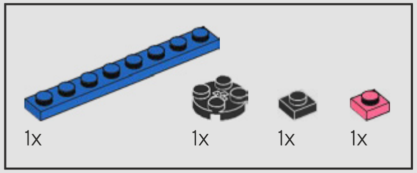

85

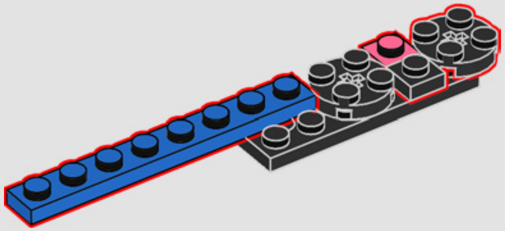

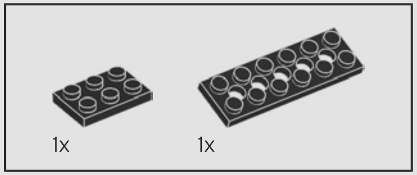

86

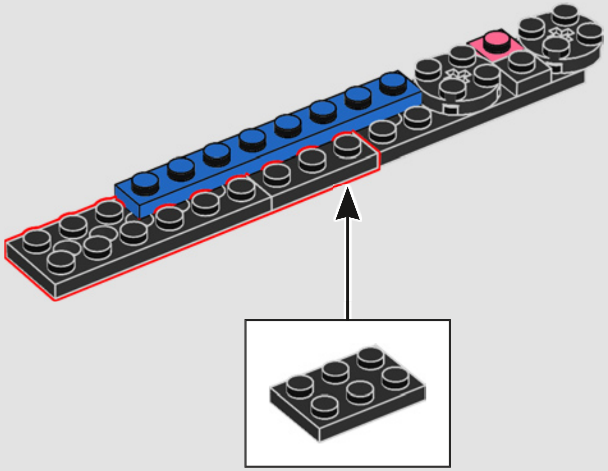

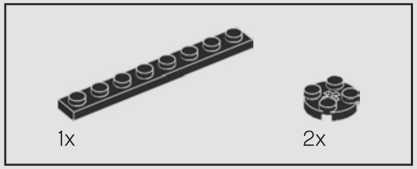

87

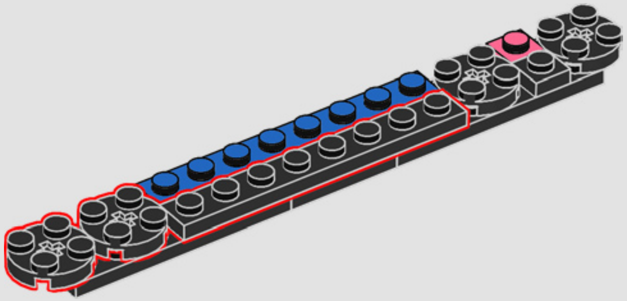

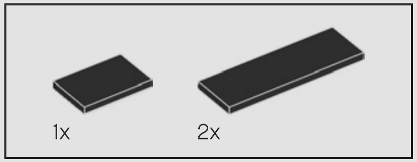

88

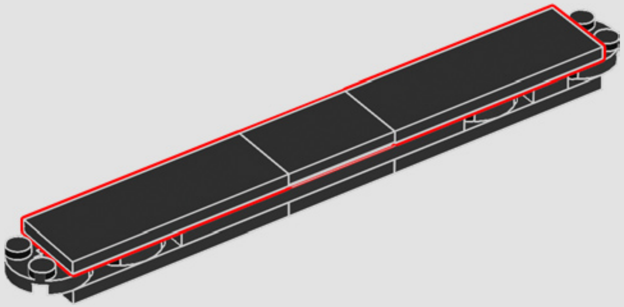

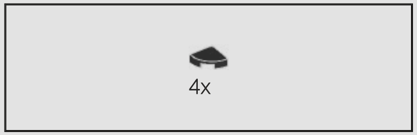

89

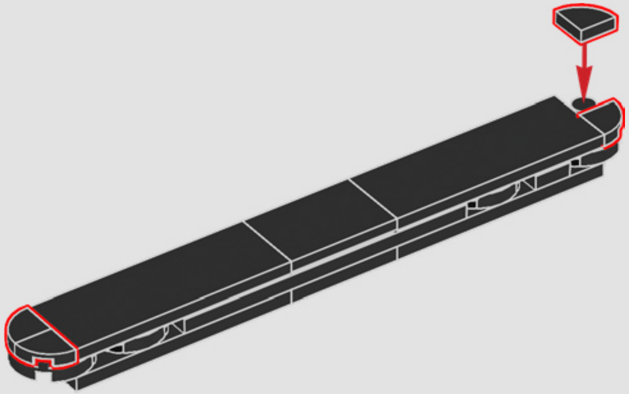

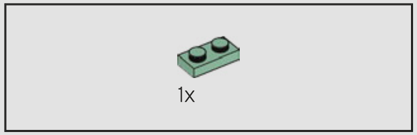

90

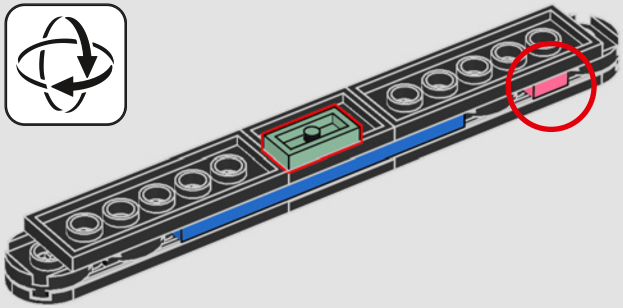

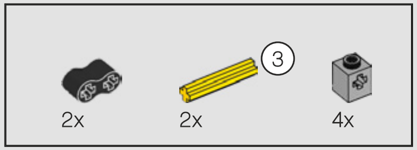

91

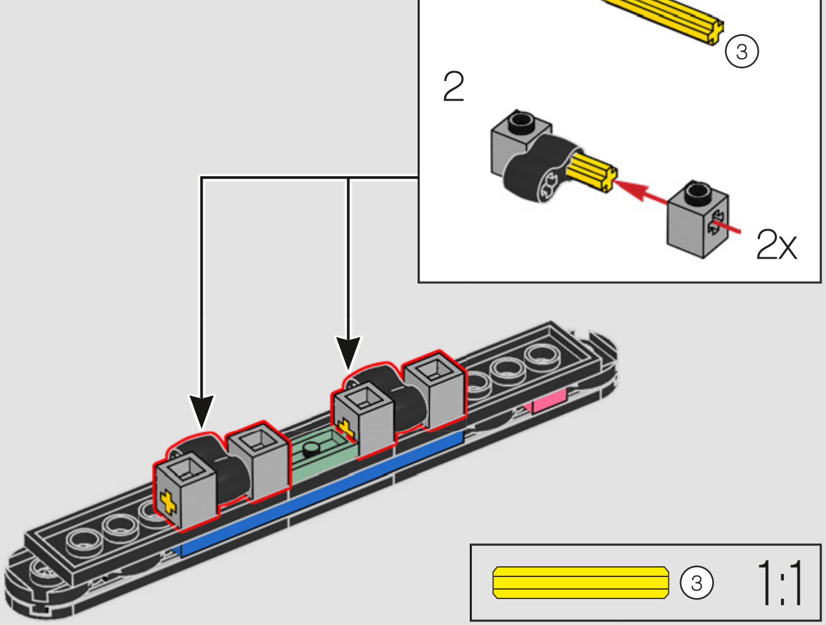

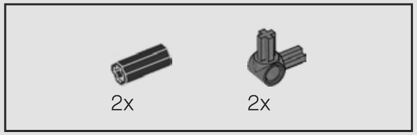

92

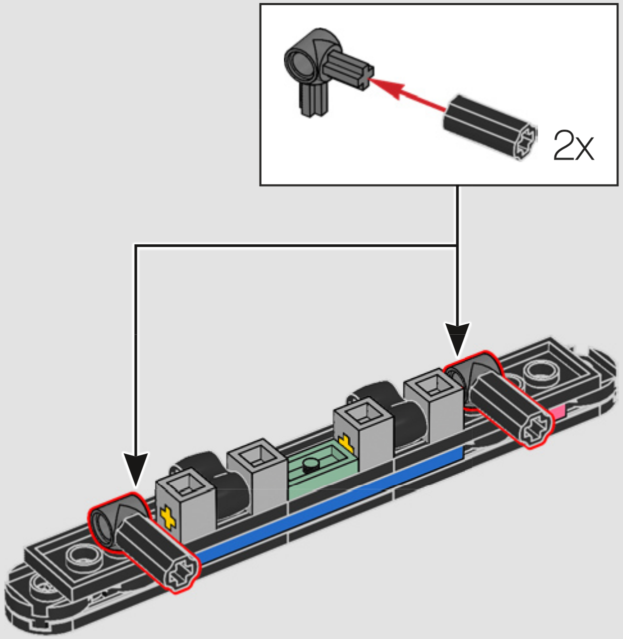

93

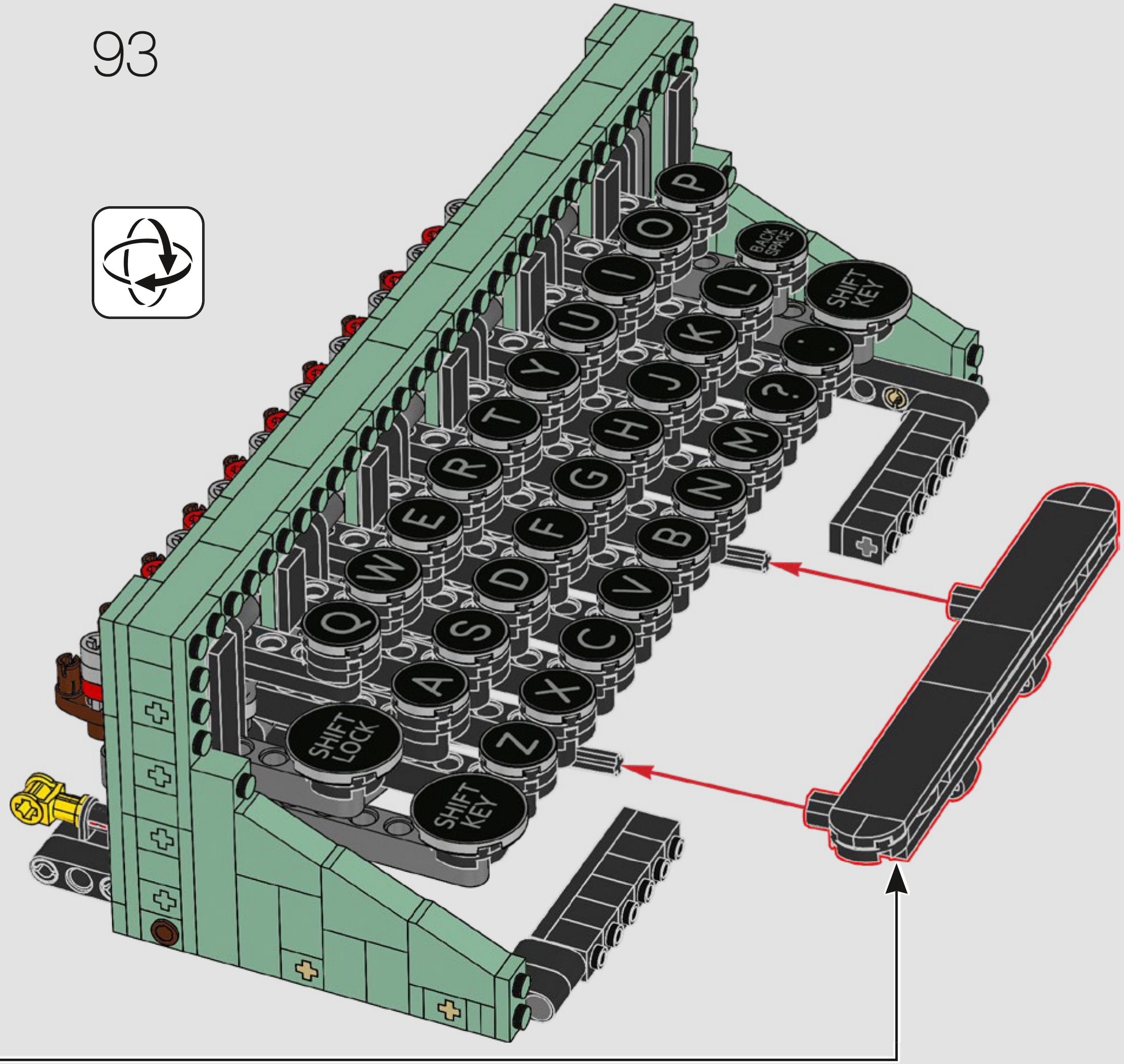

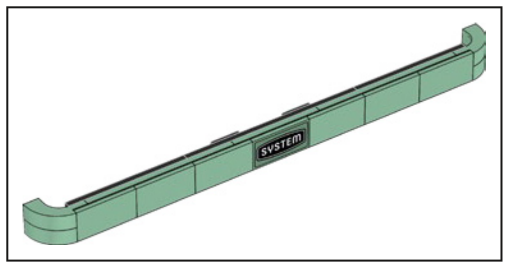

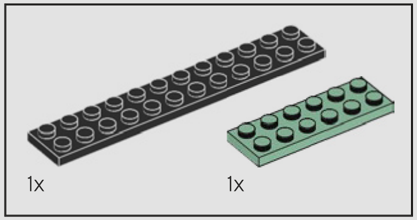

94

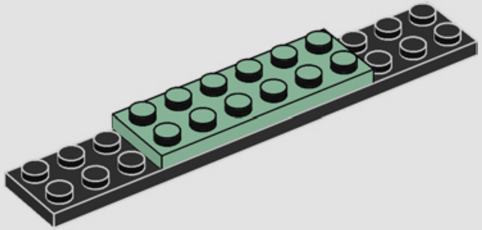

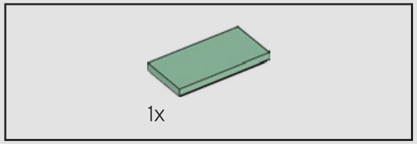

95

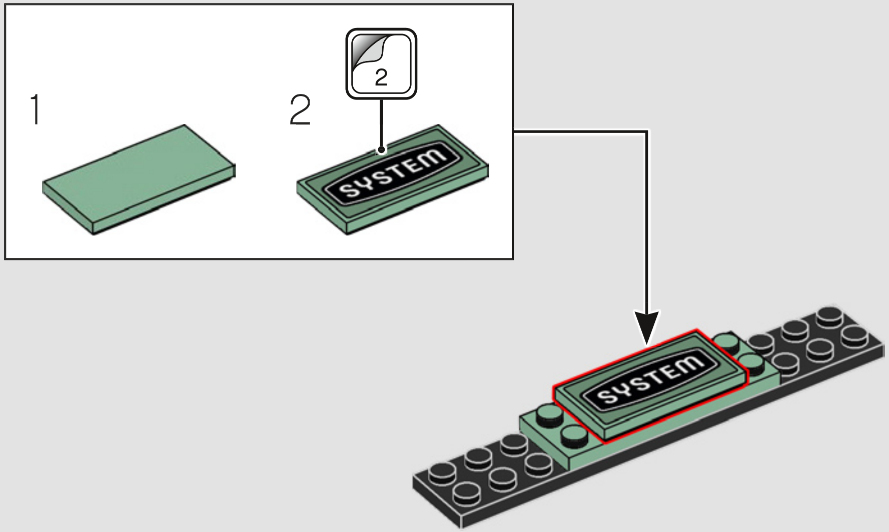
1
2
2
SYSTEM
SYSTEM

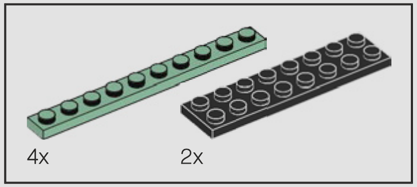

96

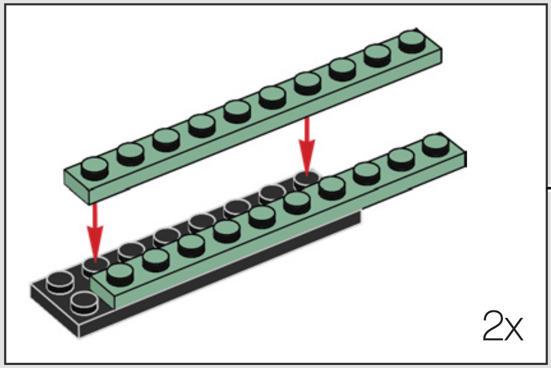

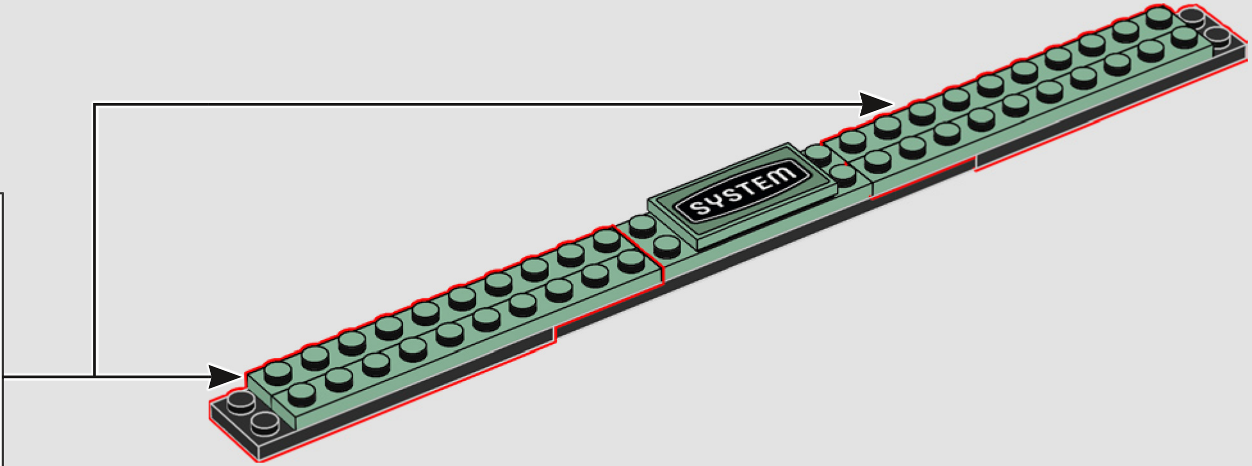

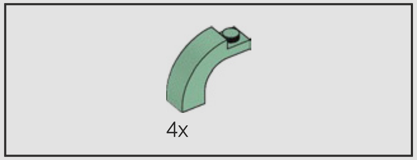

97

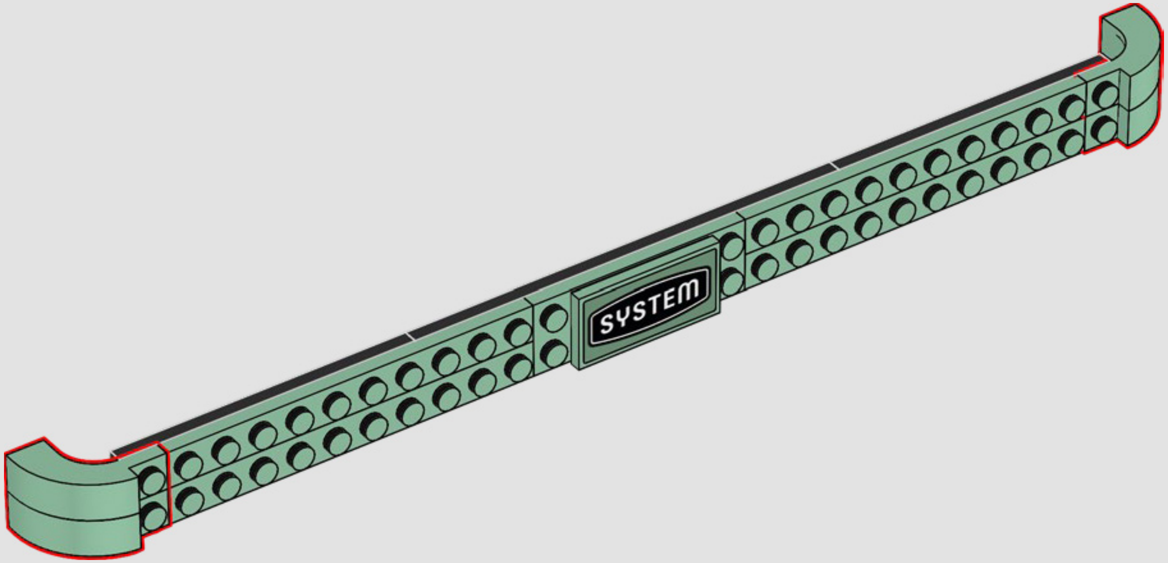

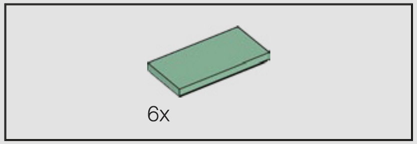

98

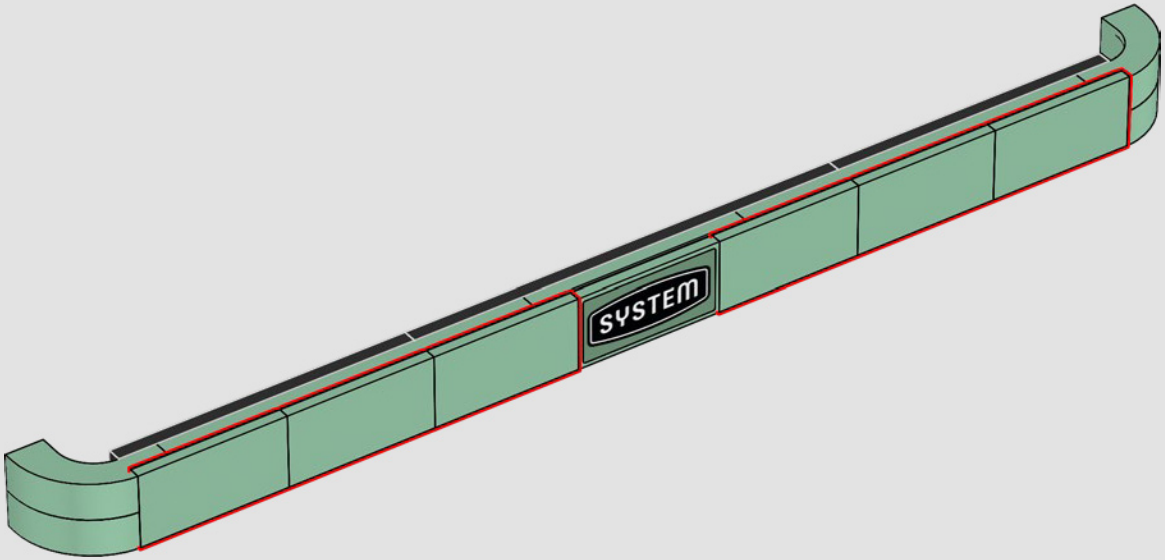

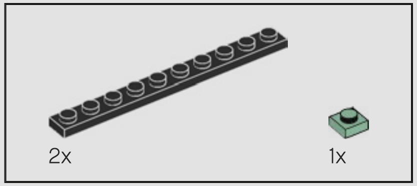

99

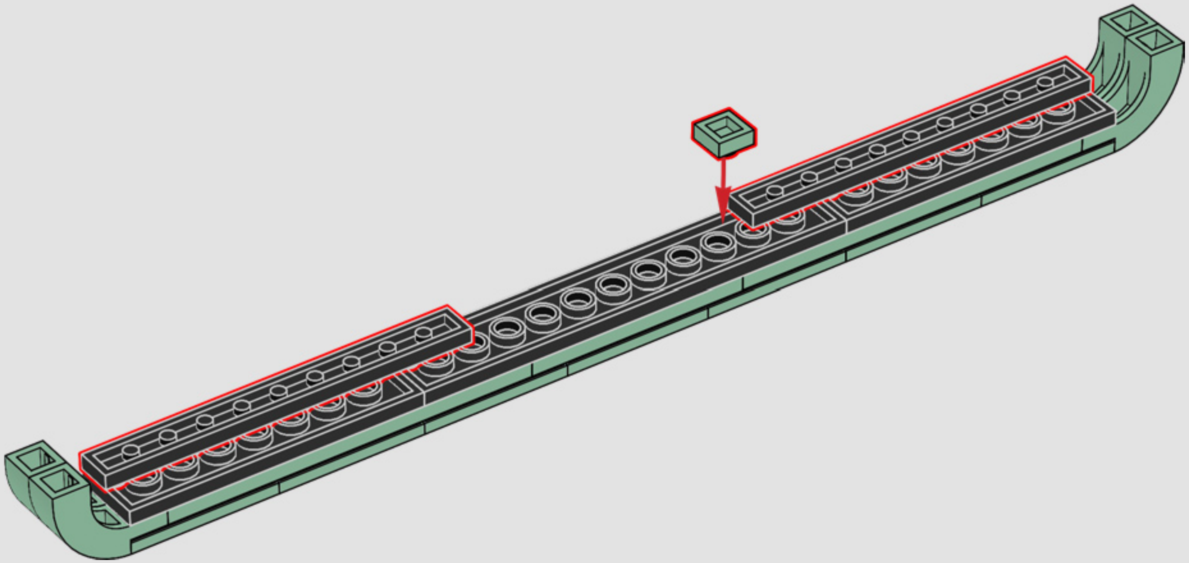

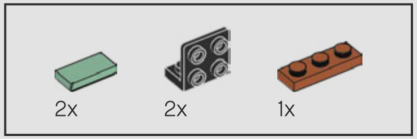

100

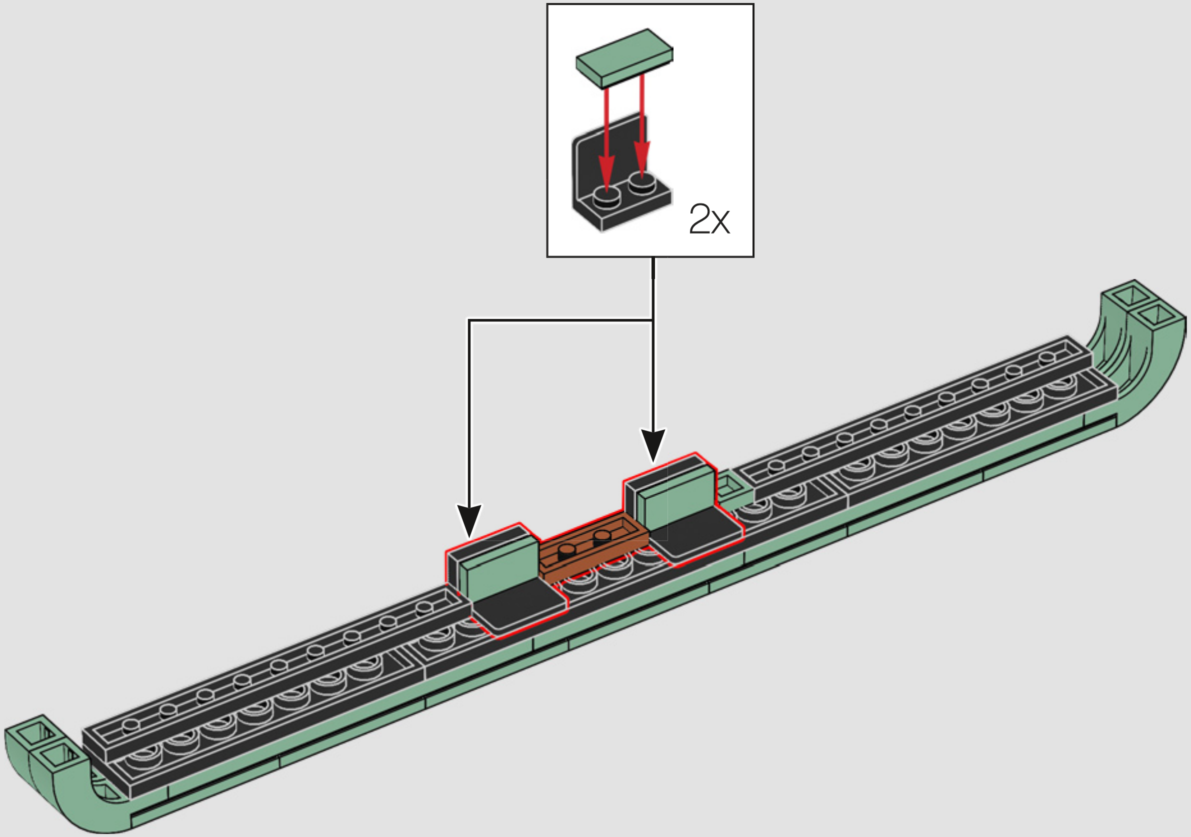

101

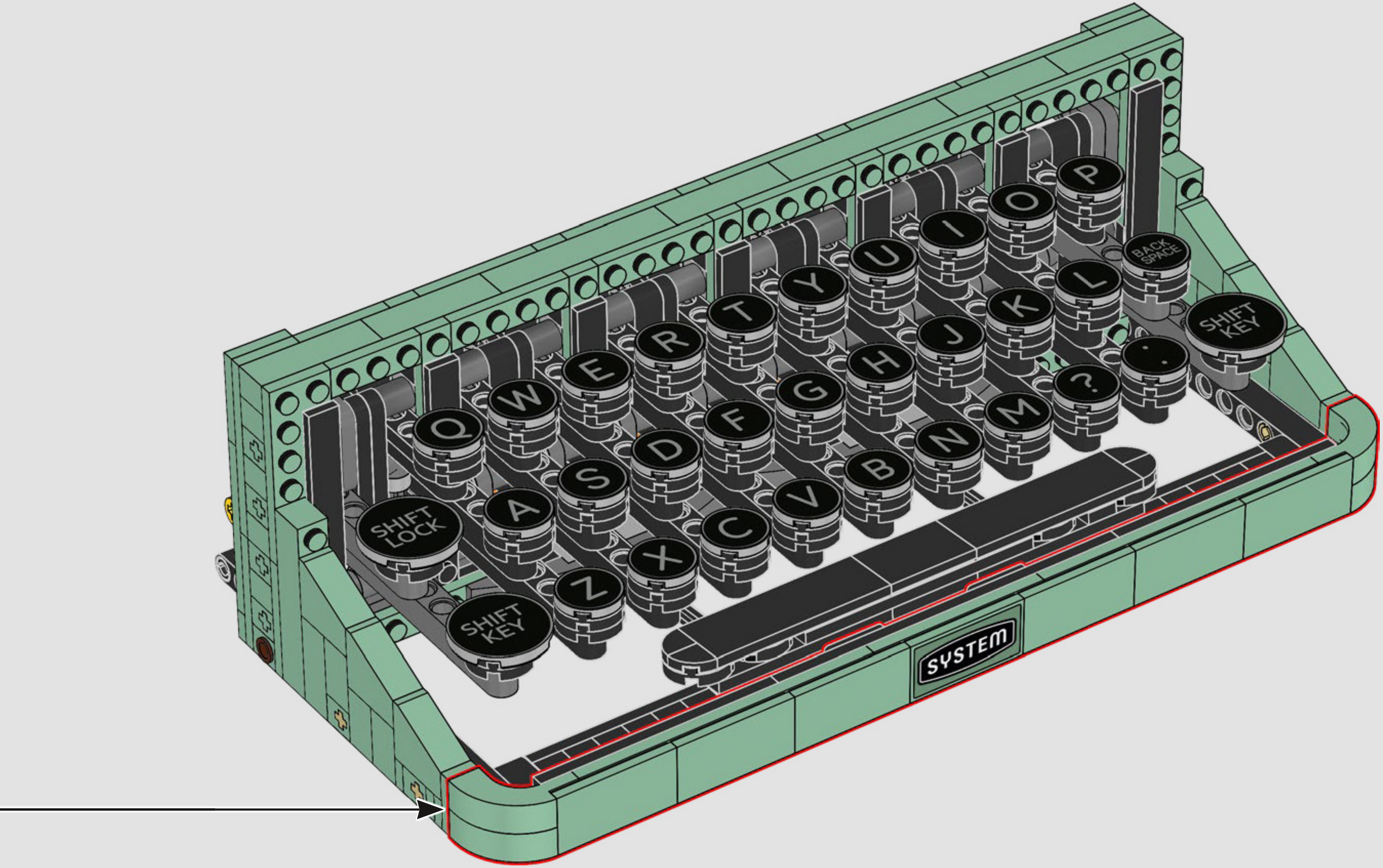
Q
W
E
R
T
Y
U
I
O
P
A
S
D
F
G
H
J
K
L
Z
X
C
V
B
N
M
?
:
SHIFT LOCK
SHIFT KEY
SHIFT KEY
BACK SPACE
SYSTEM

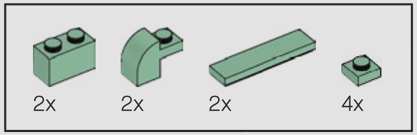

102

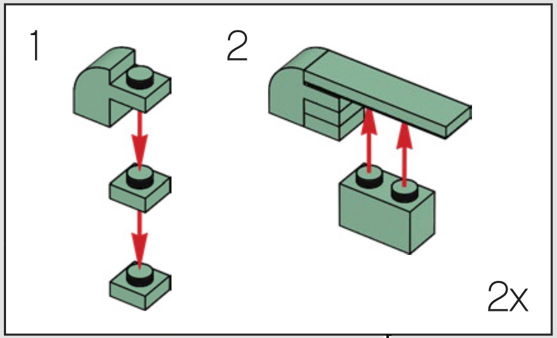

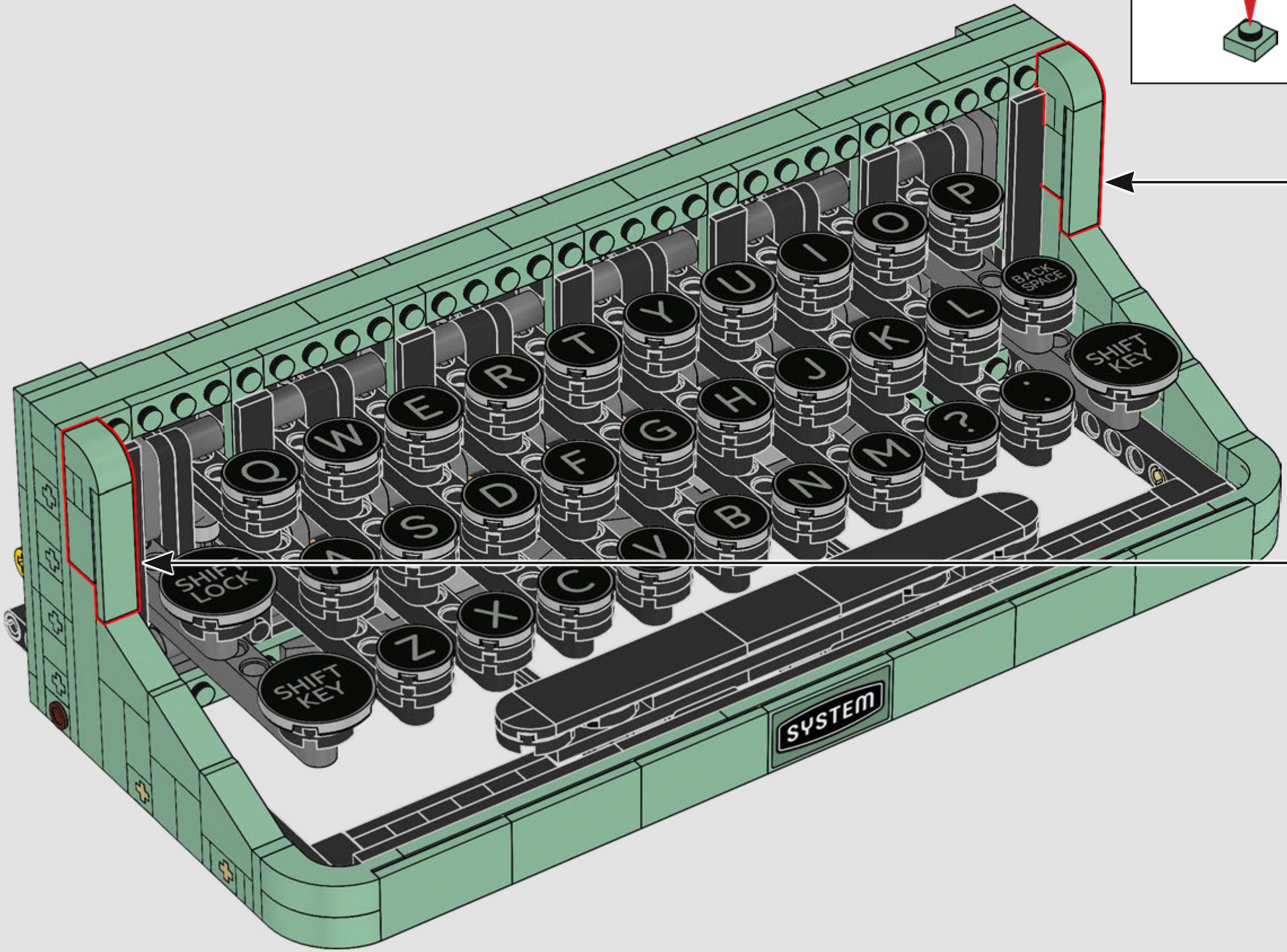

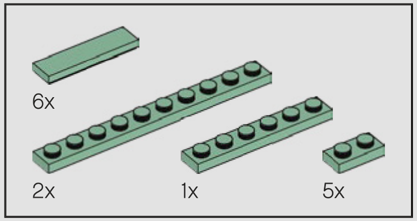

103

1

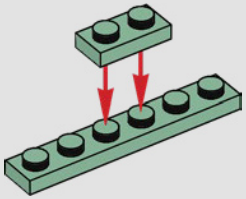

2

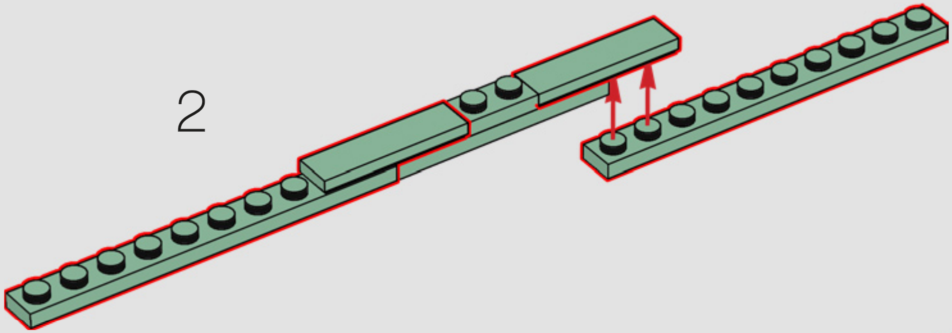

3

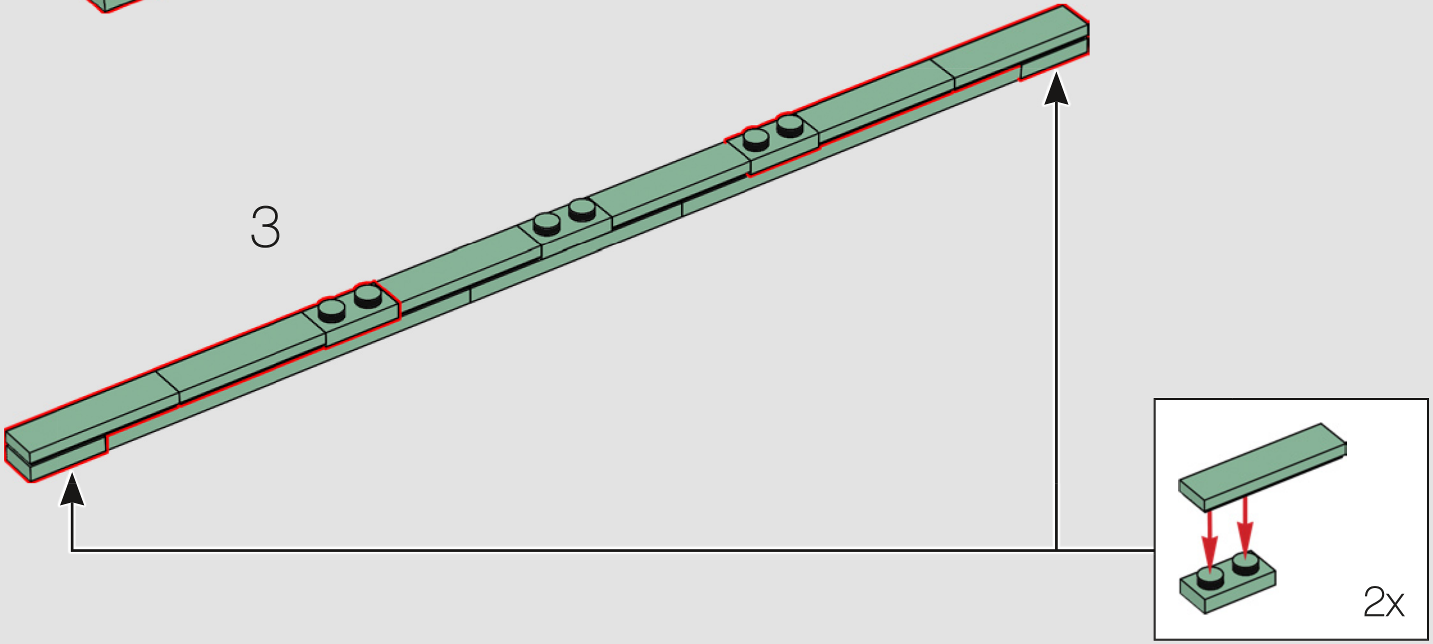

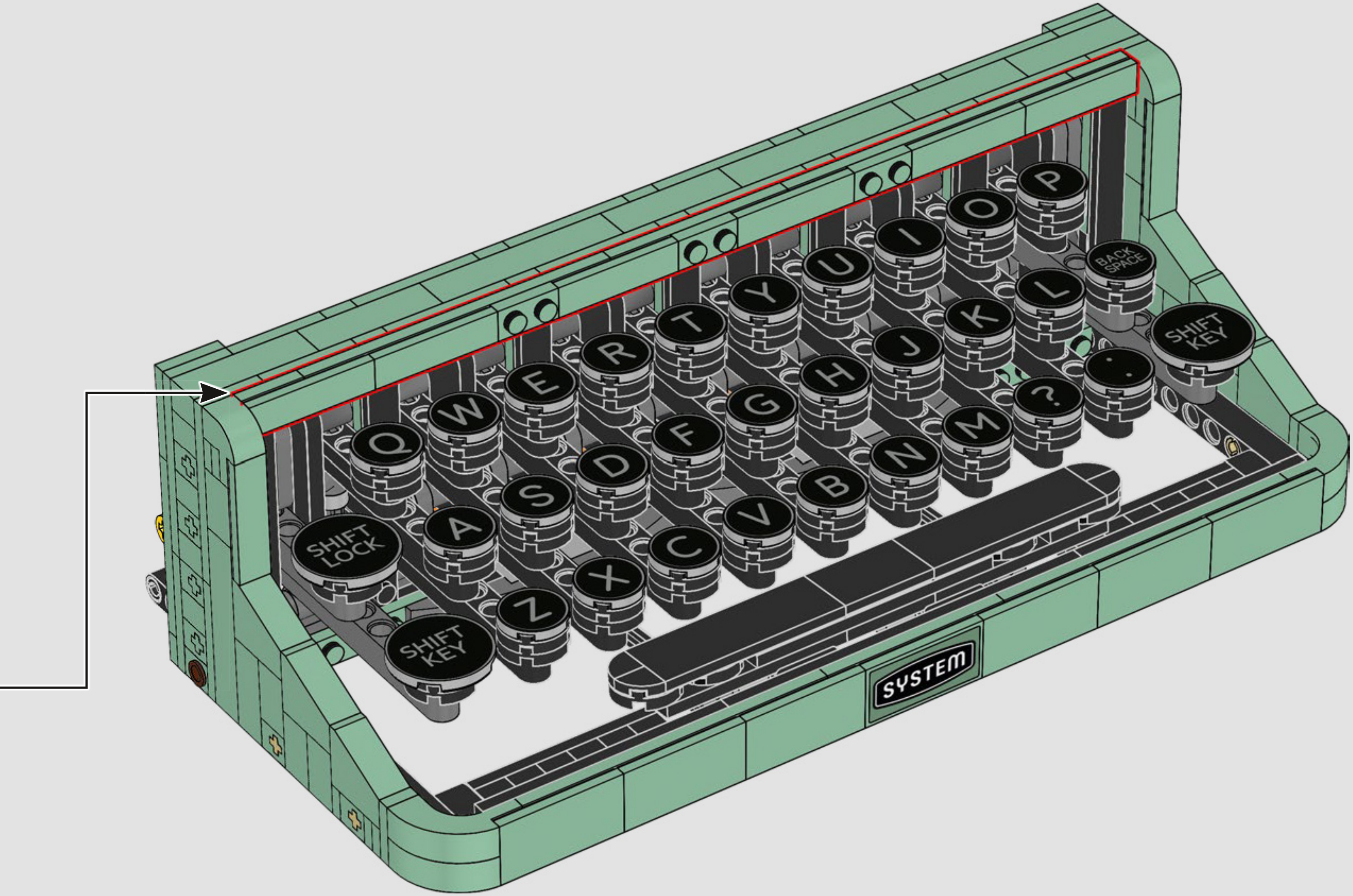

Q
W
E
R
T
Y
U
I
O
P
A
S
D
F
G
H
J
K
L
BACK SPACE
Z
X
C
V
B
N
M
?
:
SHIFT LOCK
SHIFT KEY
SHIFT KEY
SYSTEM

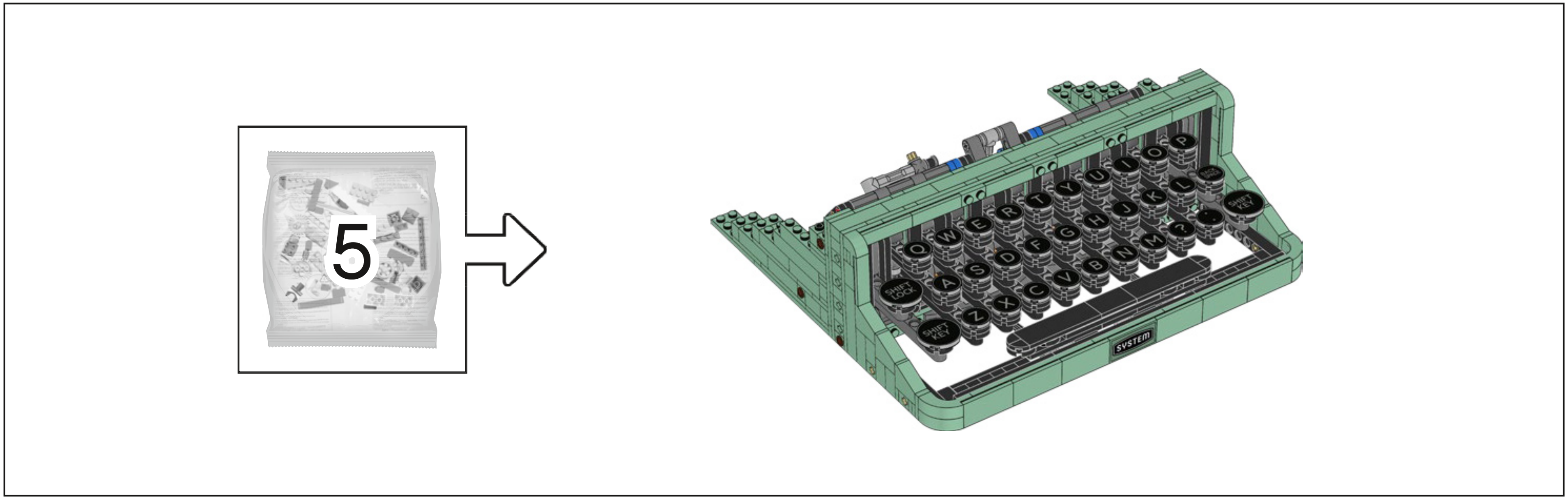

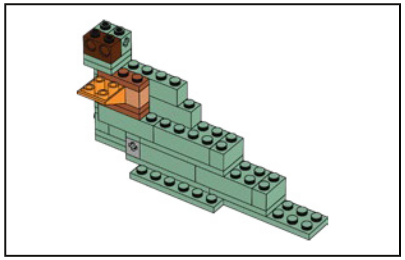

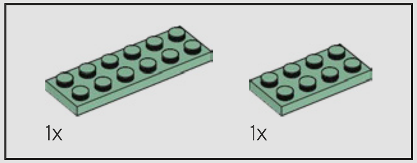

104

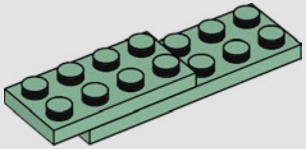

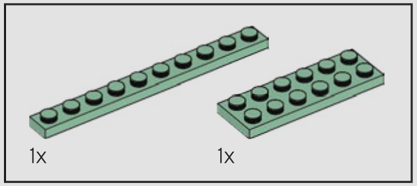

105

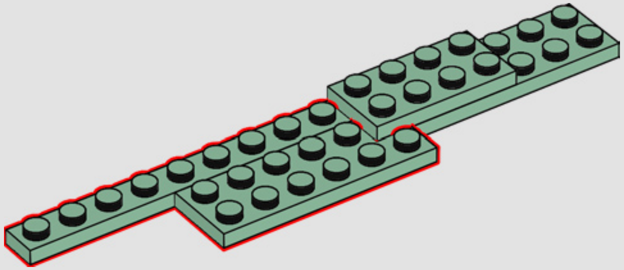

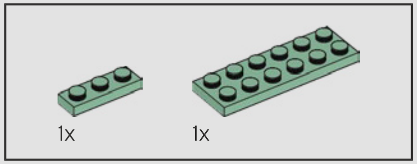

106

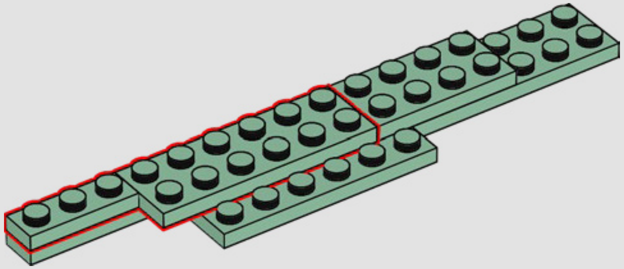

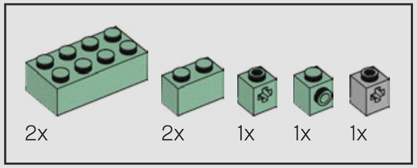
2x
2x
1x
1x
1x

107

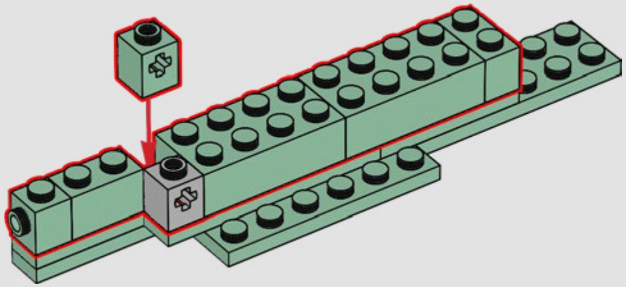

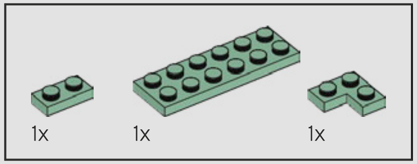

108

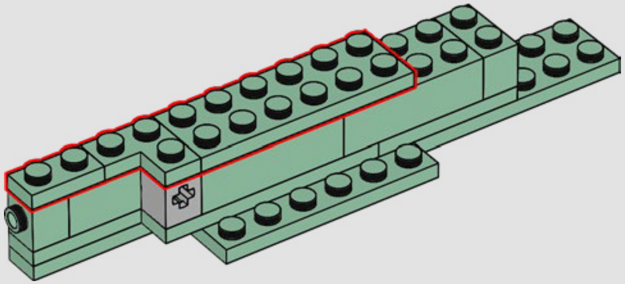

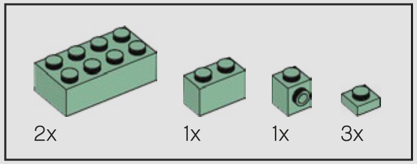

109

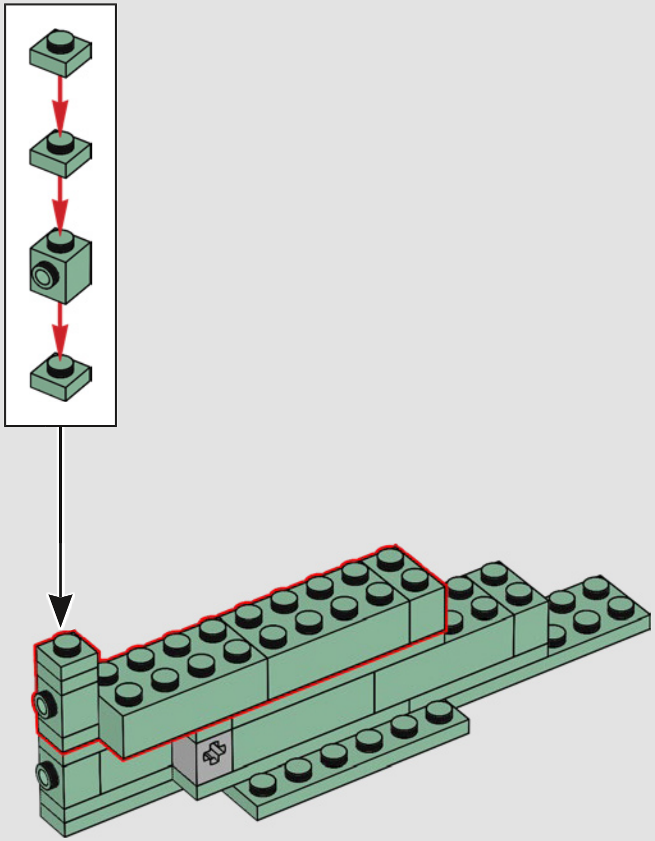

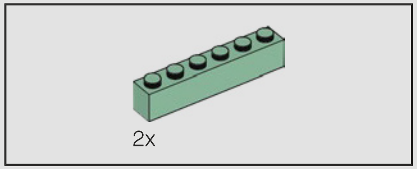

110

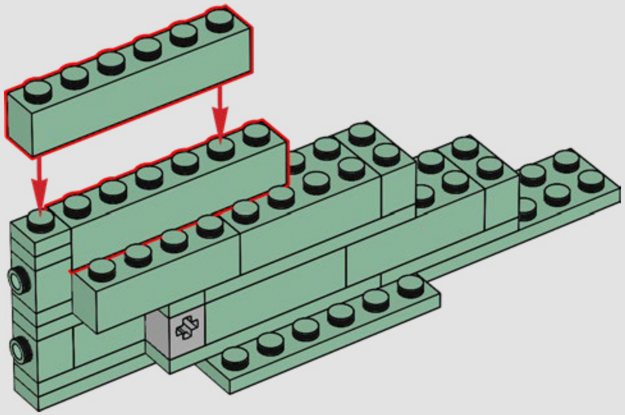

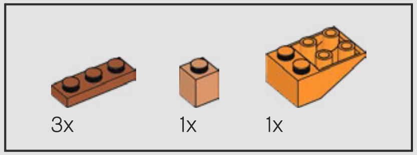

111

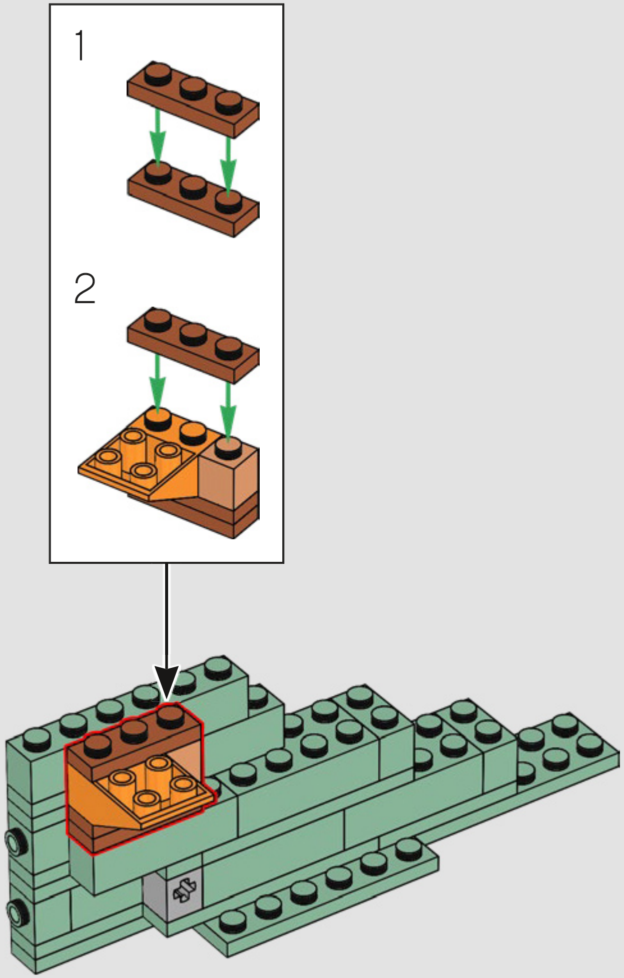

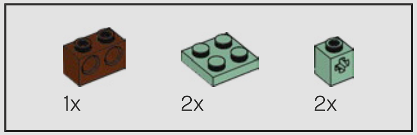

112

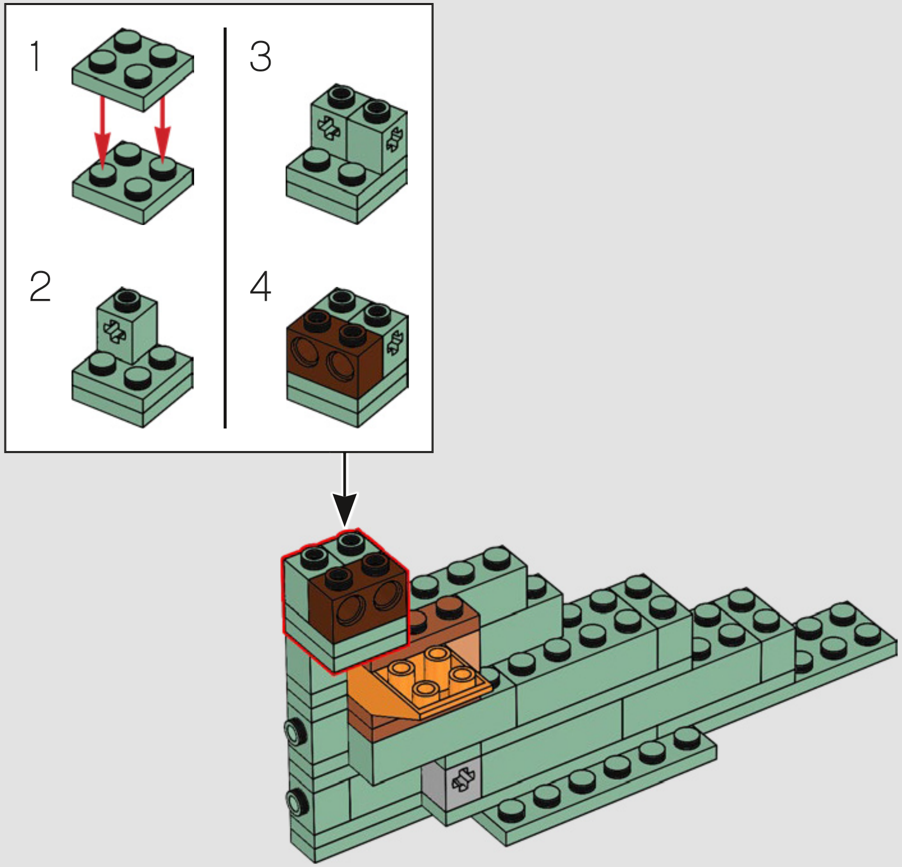

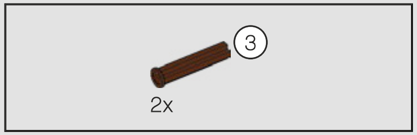

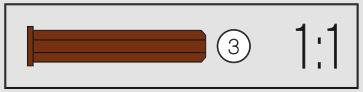

113

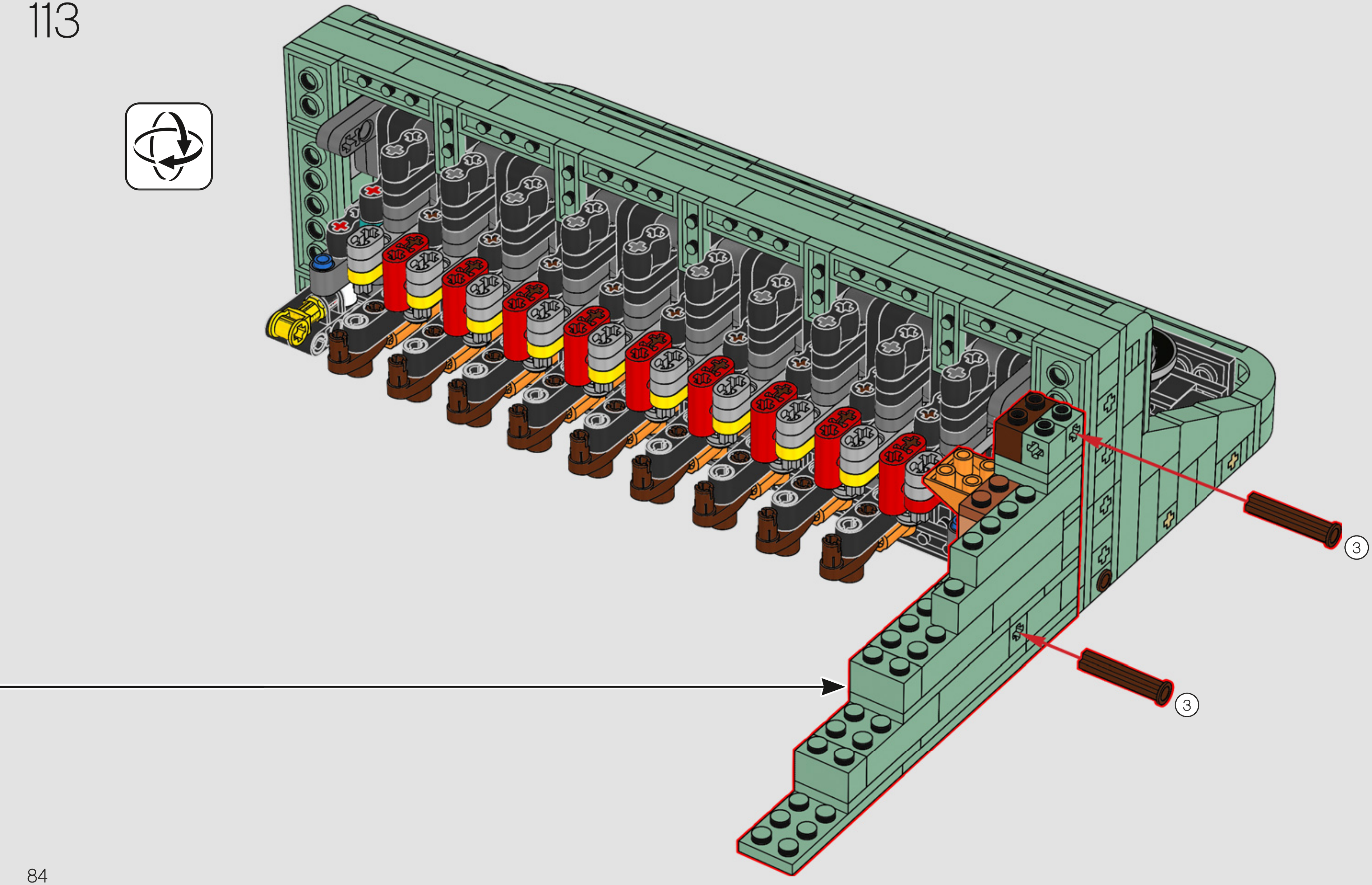

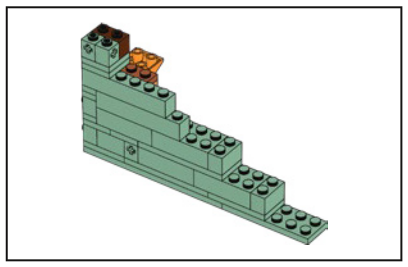

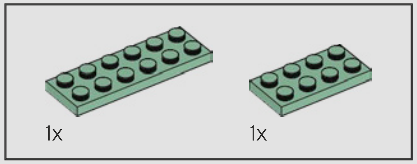

114

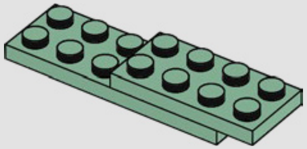

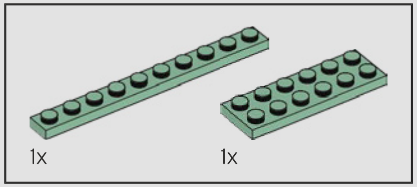

115

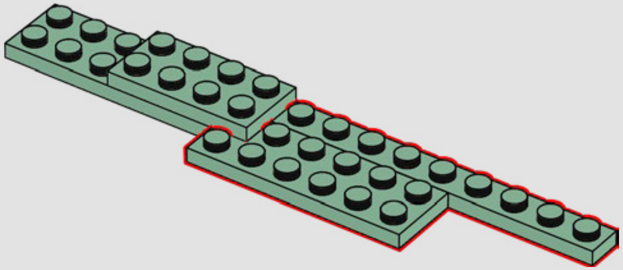

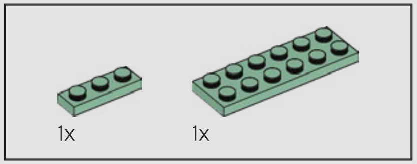

116

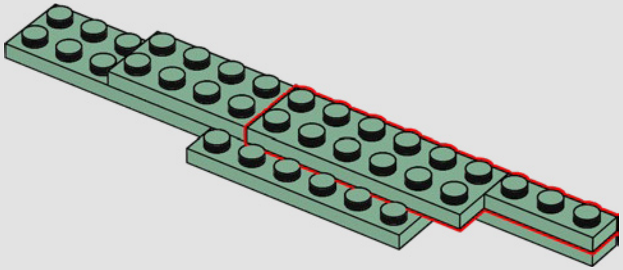

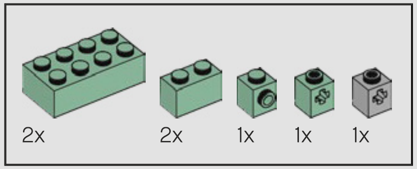
2x
2x
1x
1x
1x

117

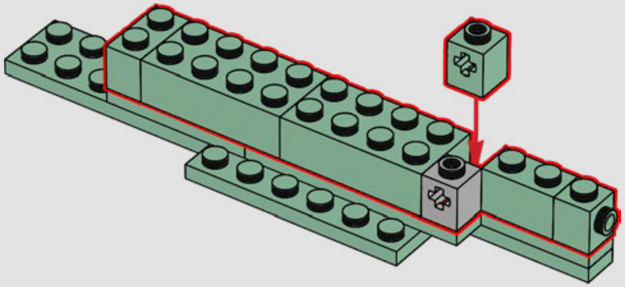

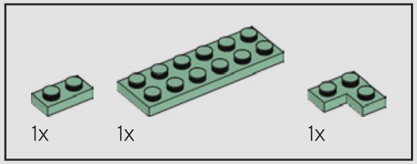

118

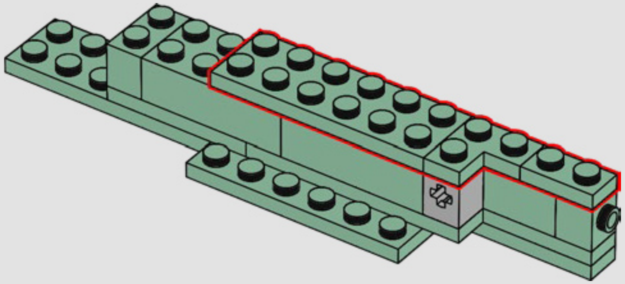

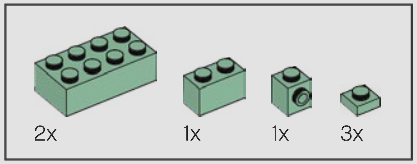

119

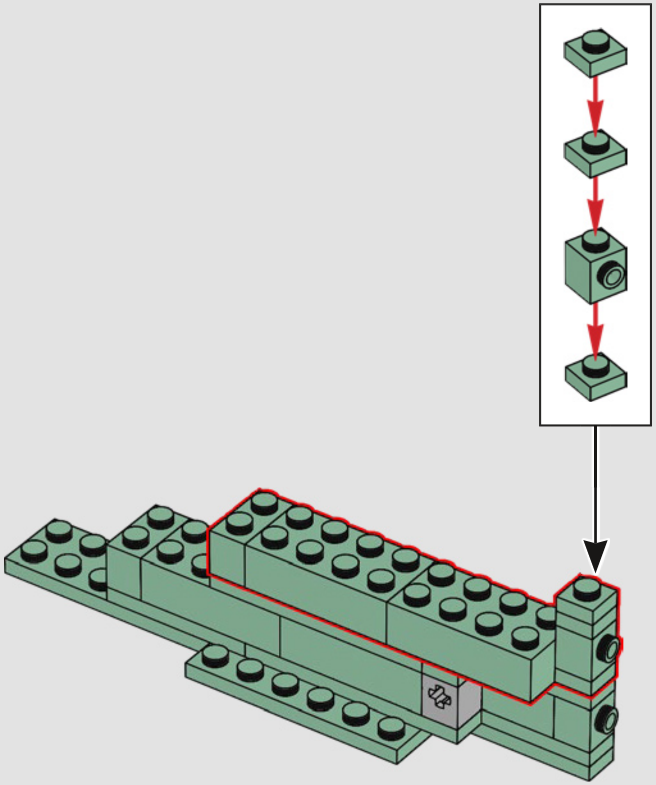

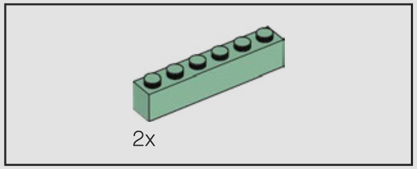

120

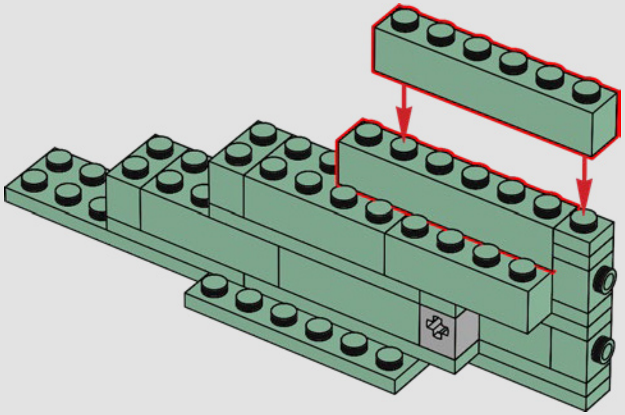

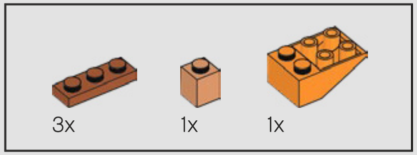

121

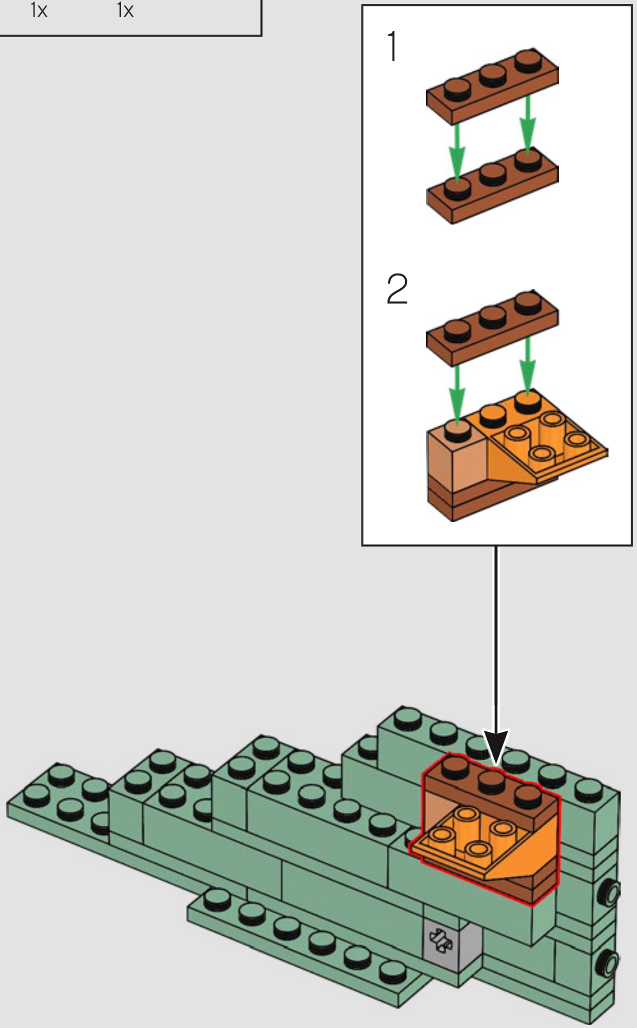

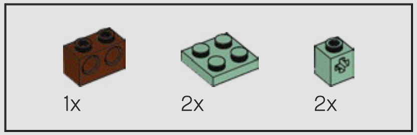

122

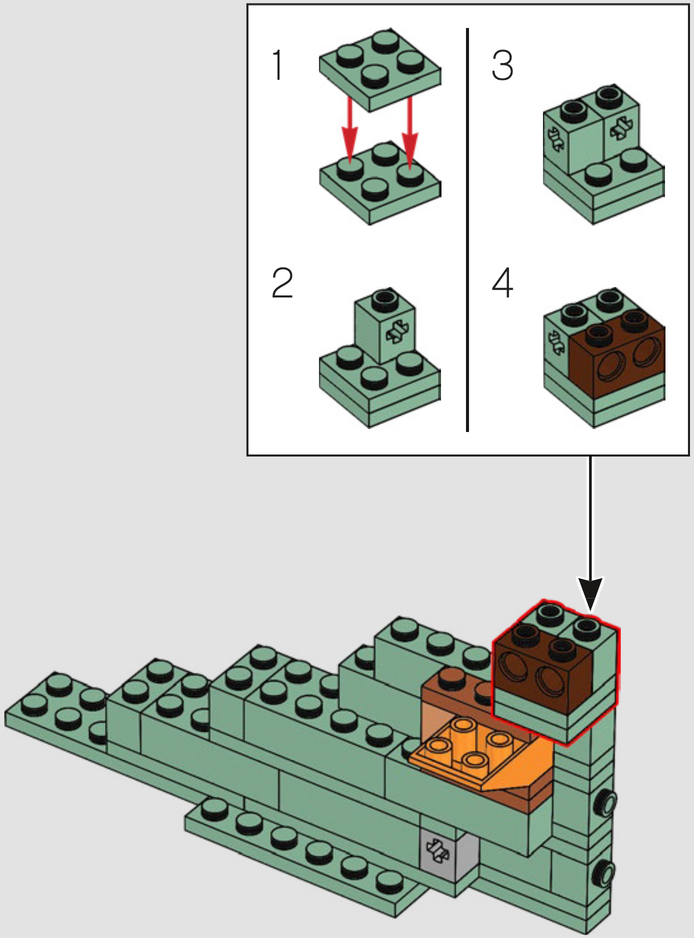

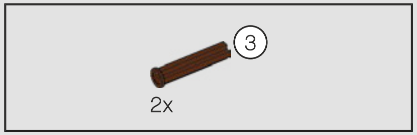

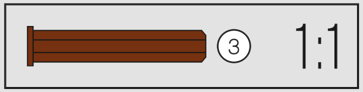

123

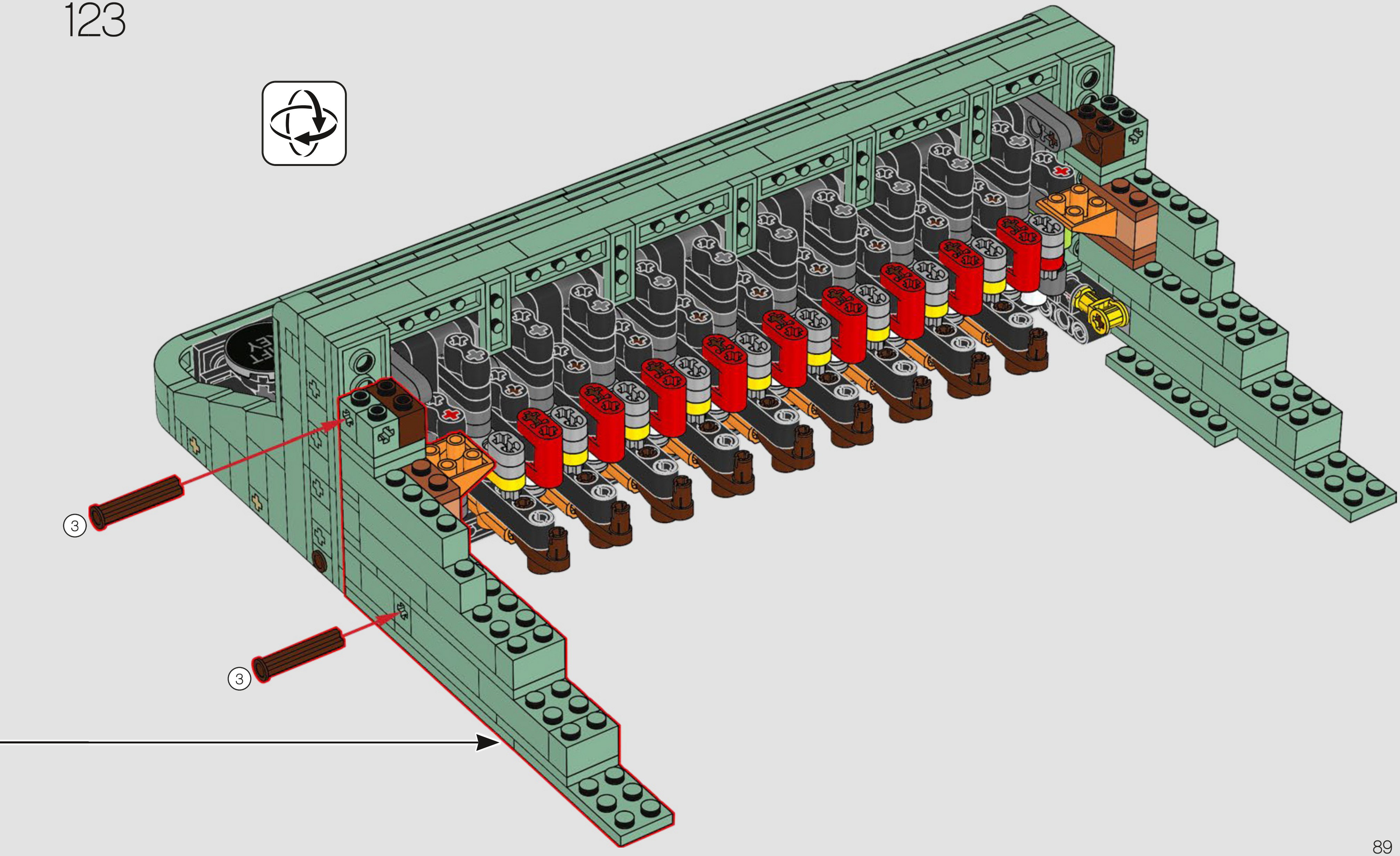

124

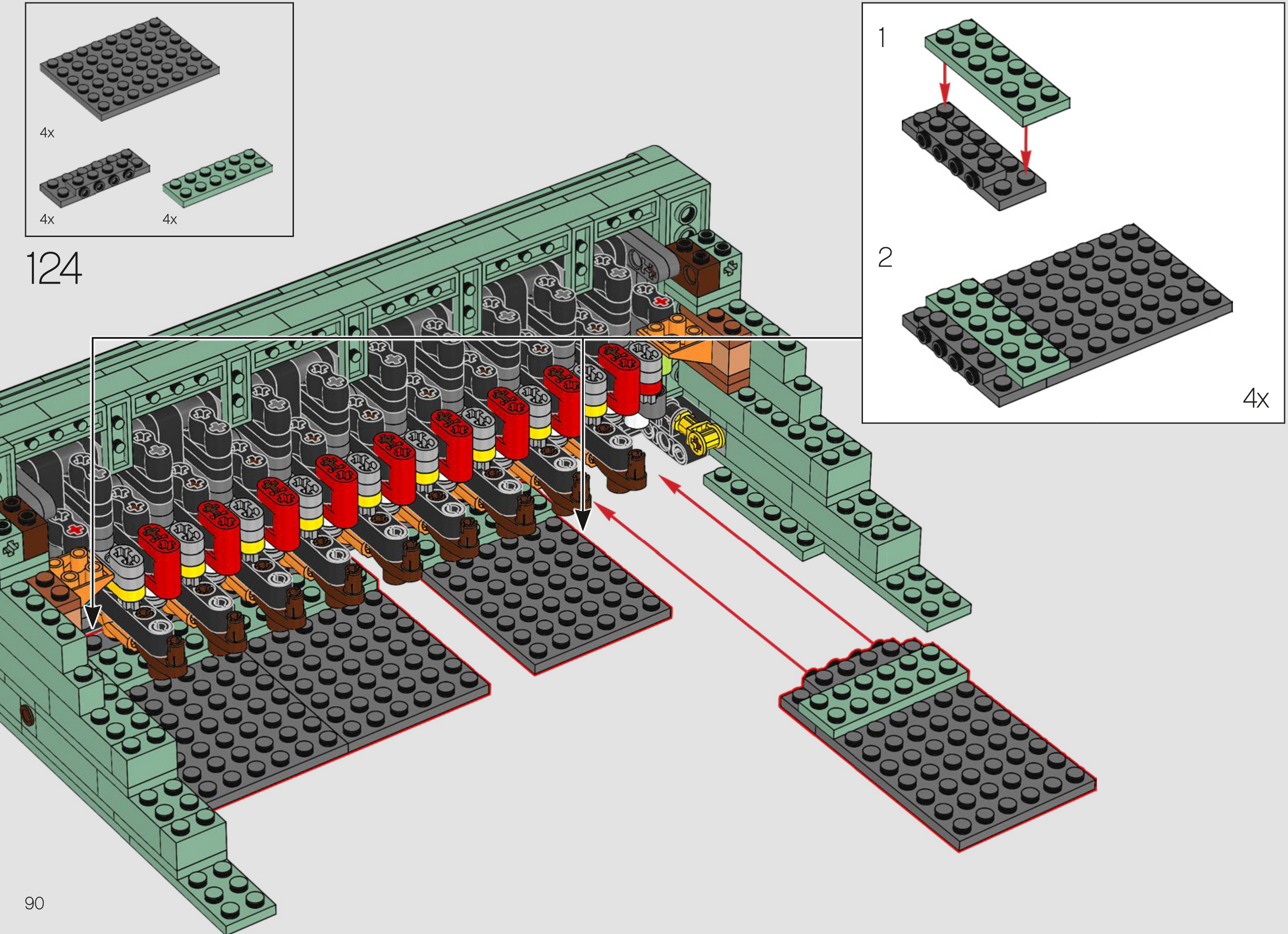
4x
4x
4x
1
2
4x

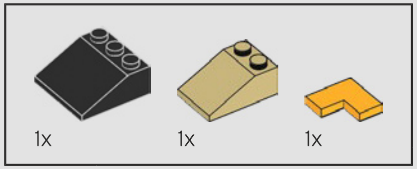

125

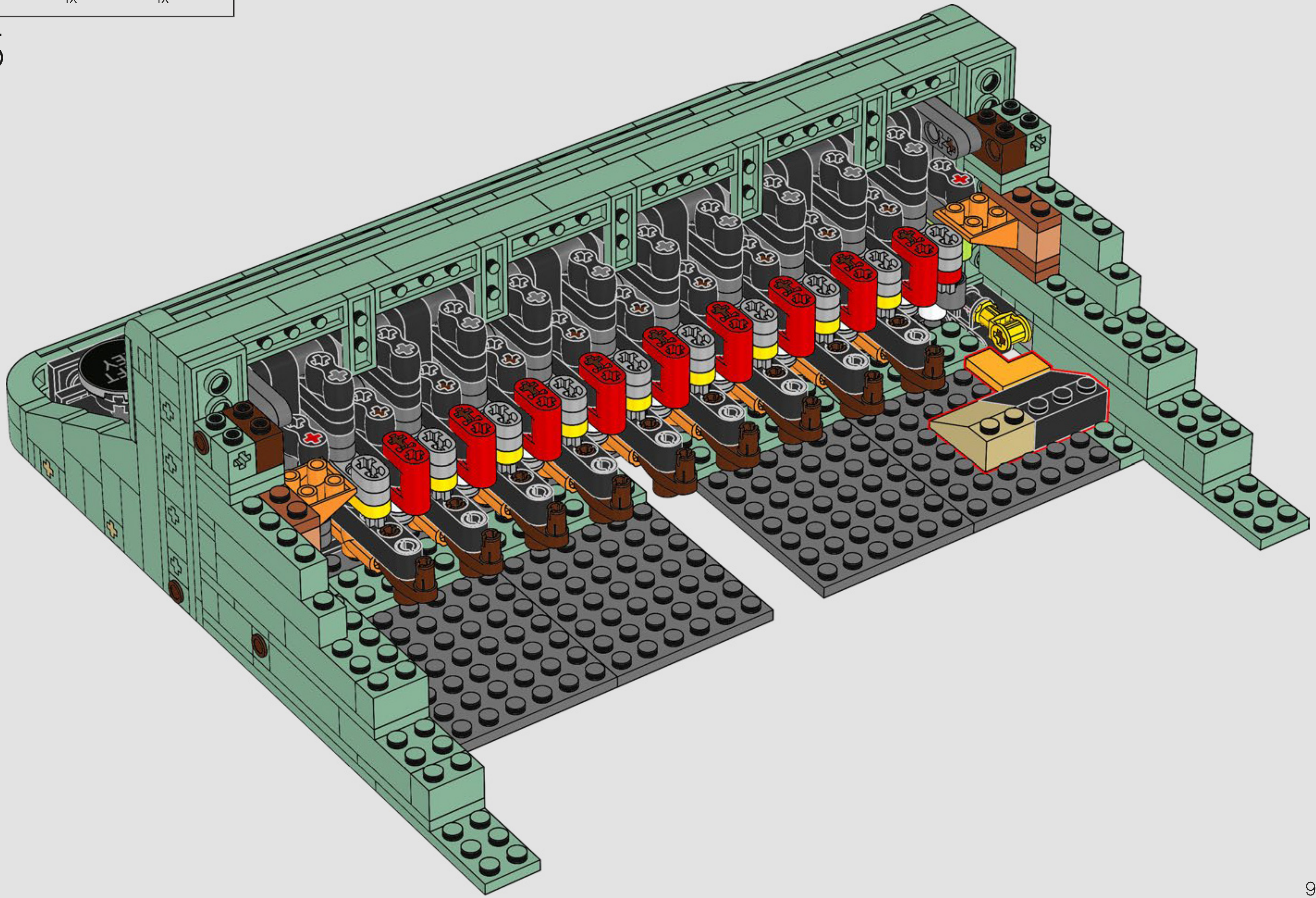

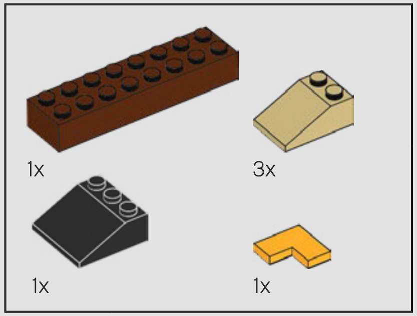

126

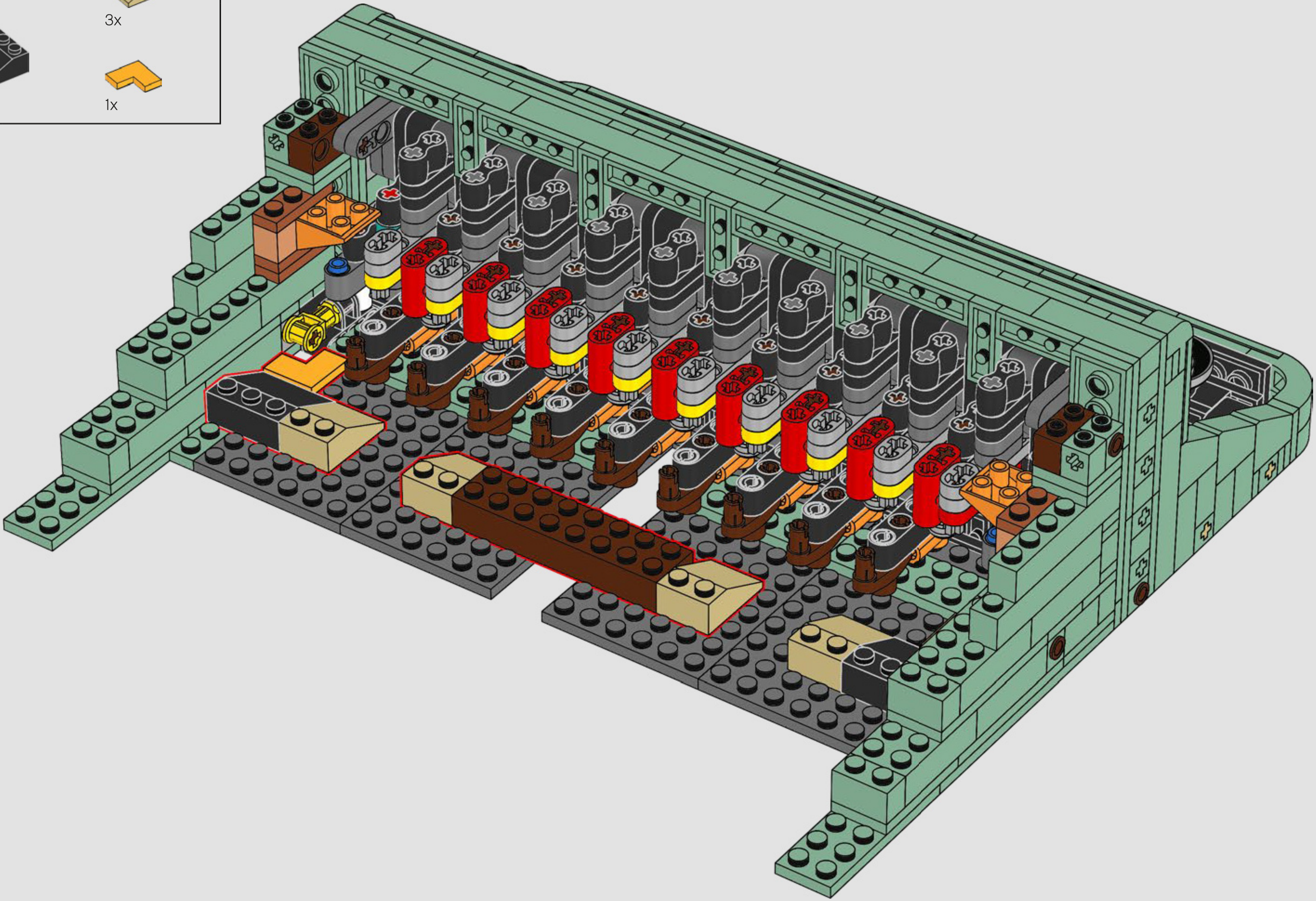

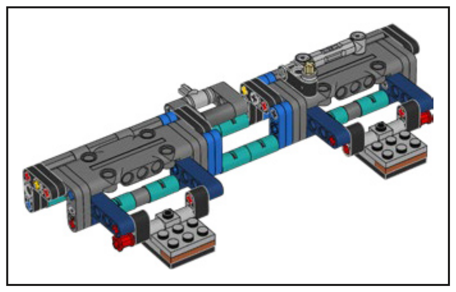

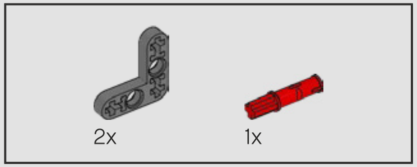

127

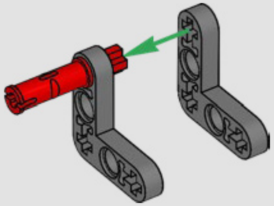

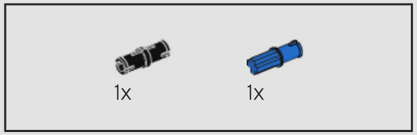

128

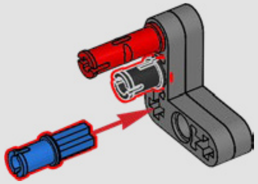

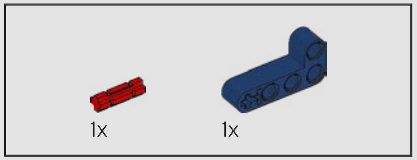

129

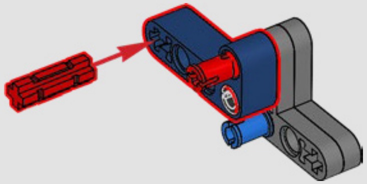

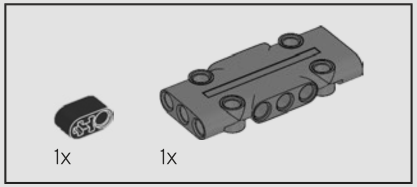

130

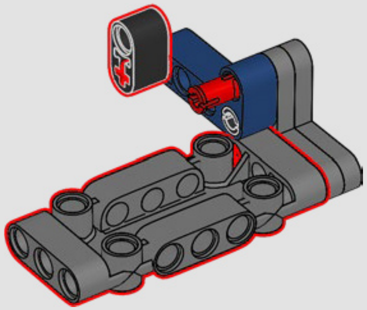

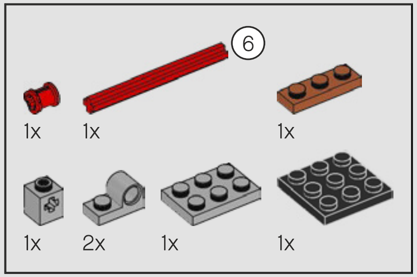
⑥
1x
1x
1x
1x
2x
1x
1x

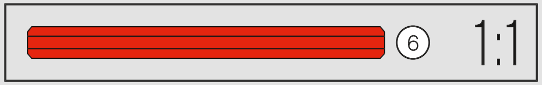

131

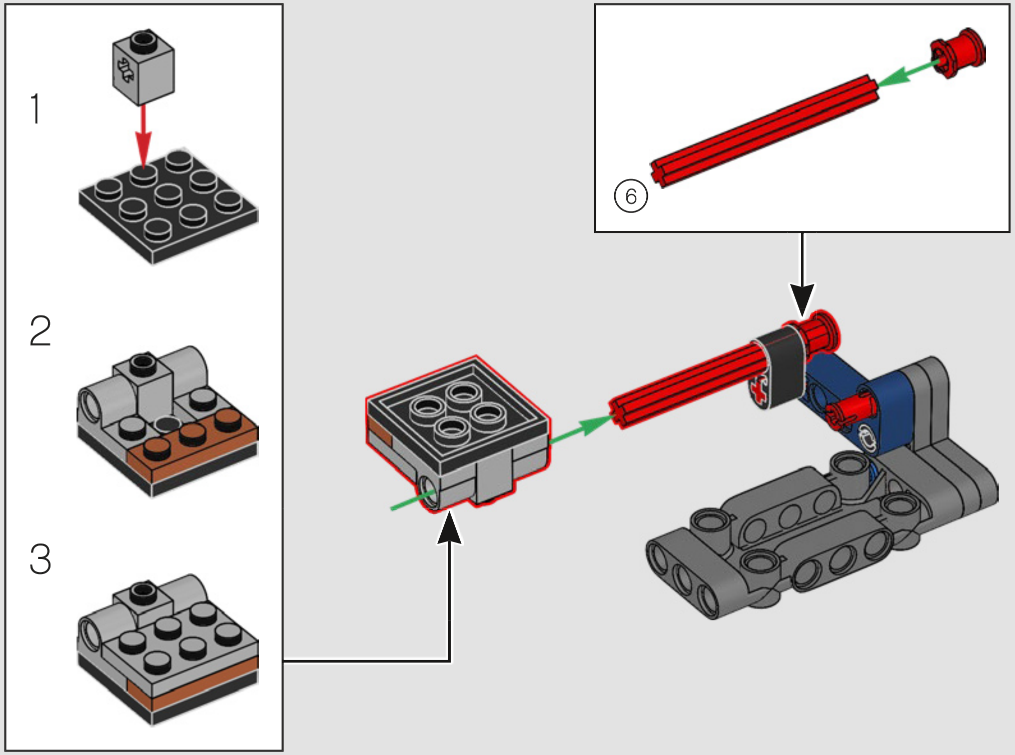

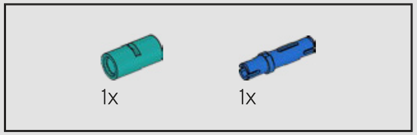

132

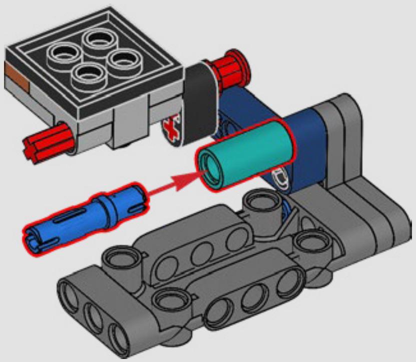

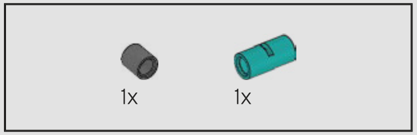

133

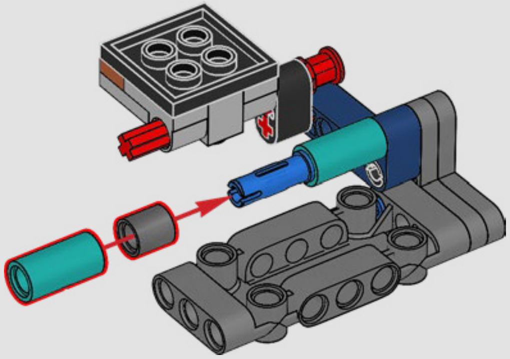

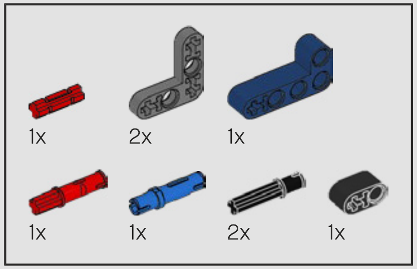
1x
2x
1x
1x
1x
2x
1x

134

1

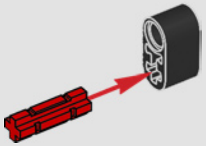

2

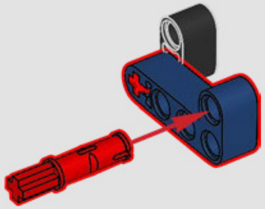

3

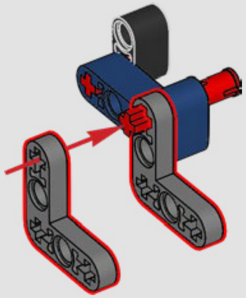

4

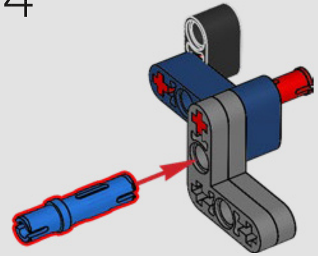

5

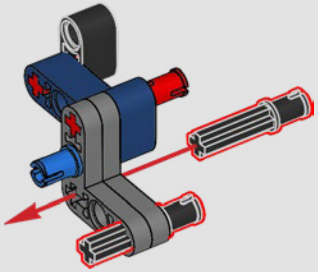

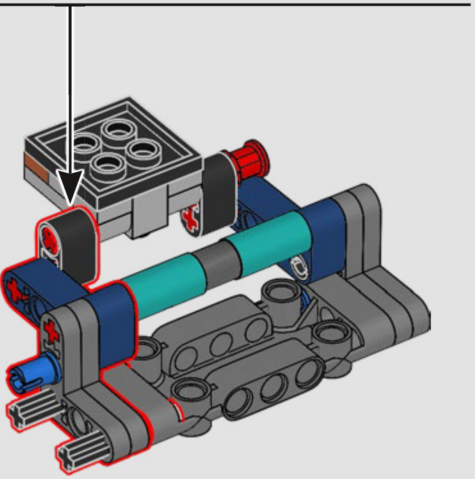

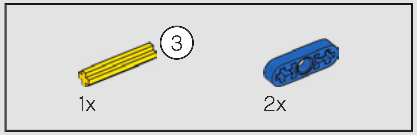

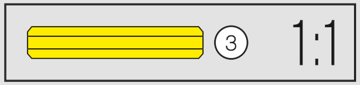

135

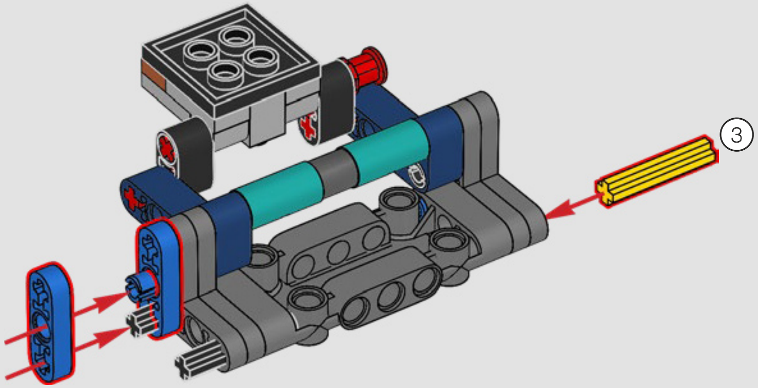

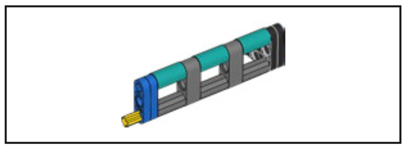

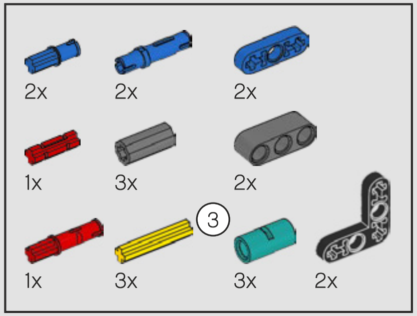
2x
2x
2x
1x
3x
2x
1x
3x
③
3x
2x

136

1

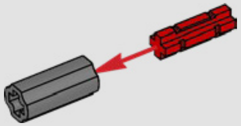

2

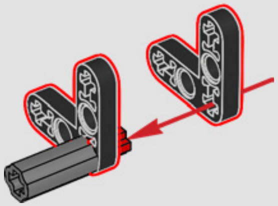

3

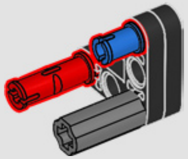

4

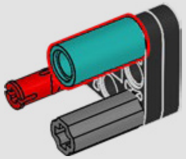

5

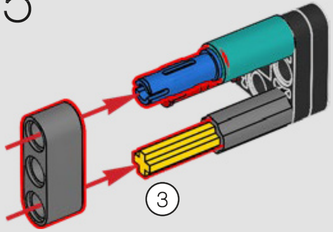

6

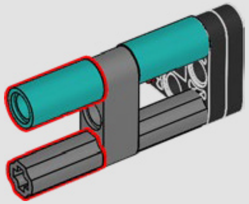

7

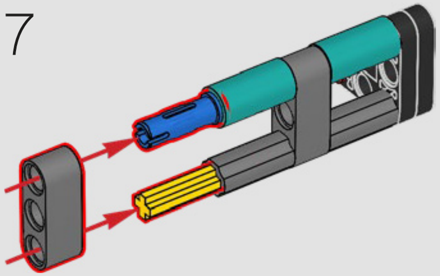

8

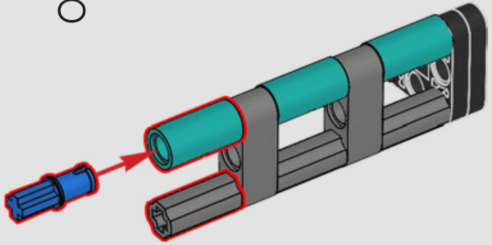

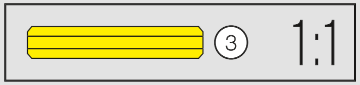

9

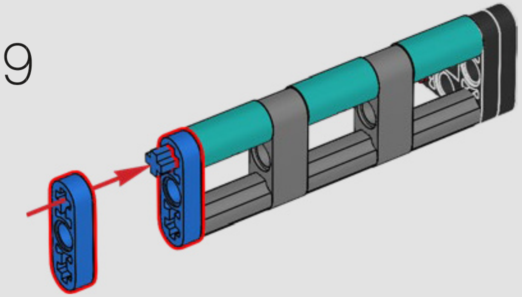

10

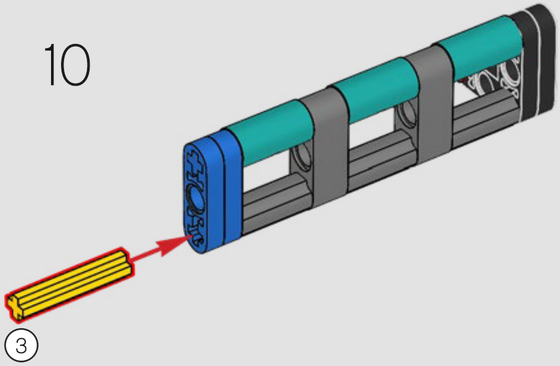

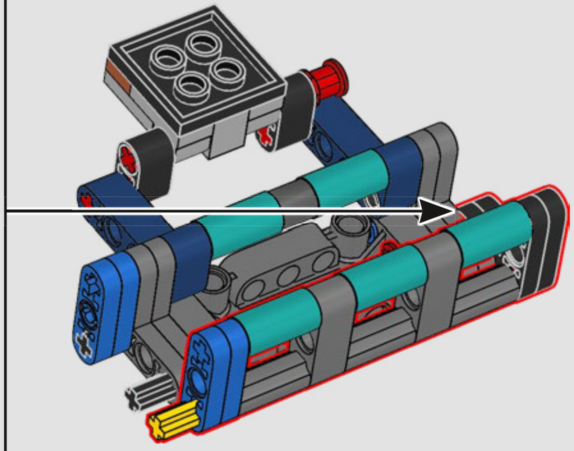

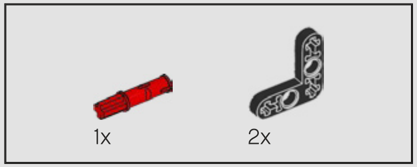

137

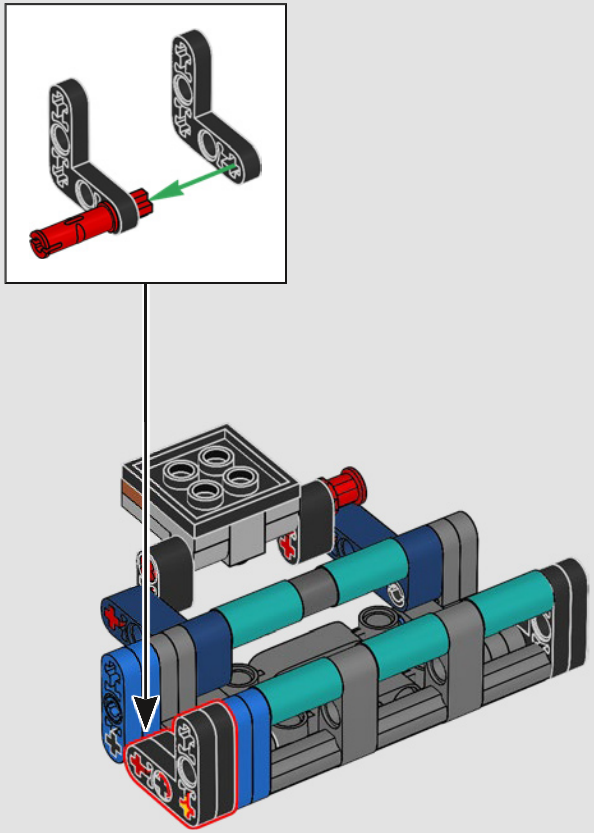

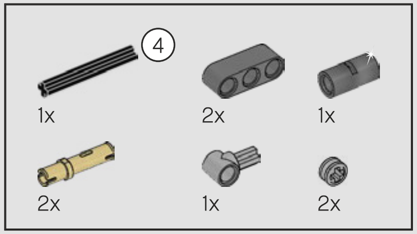
4
1x
2x
1x
2x
1x
2x

138

1

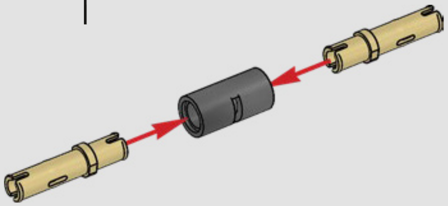

2

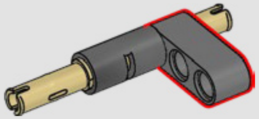

3

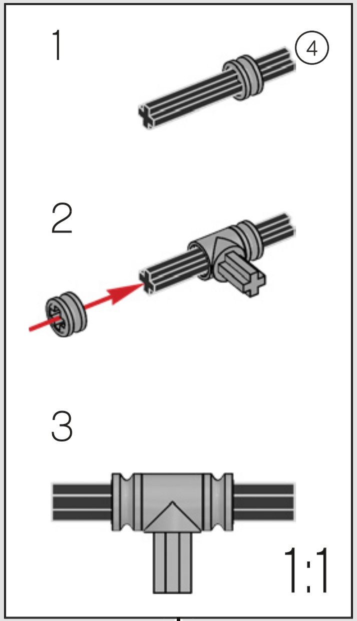

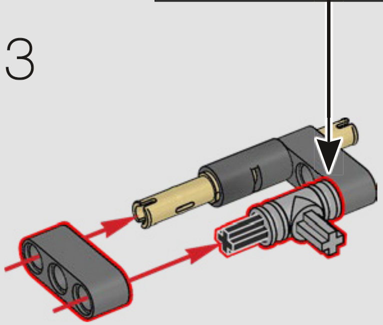

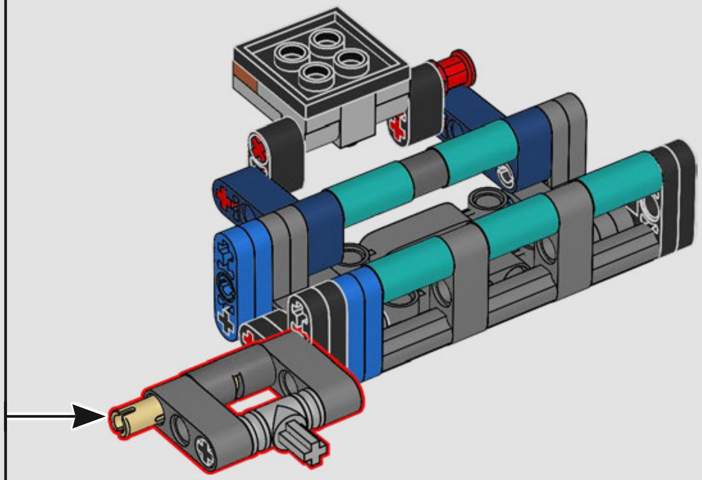

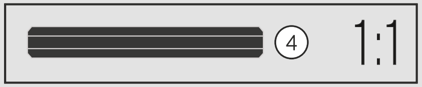

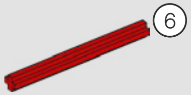

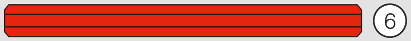

139

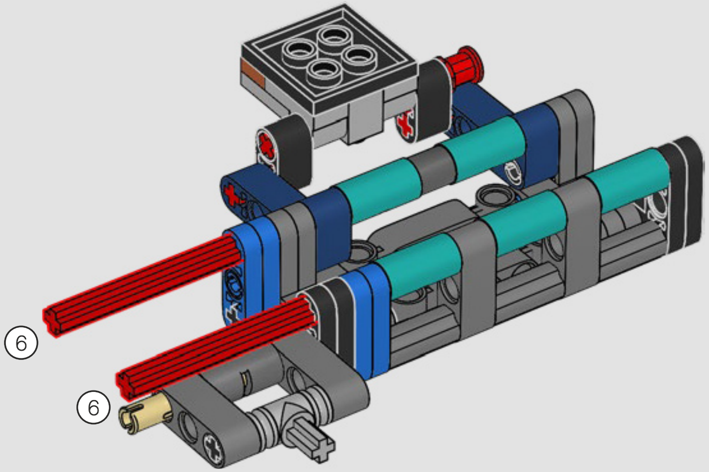

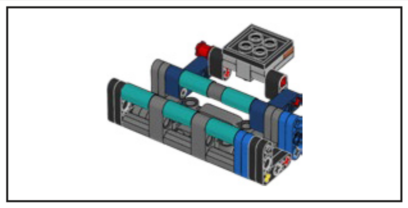

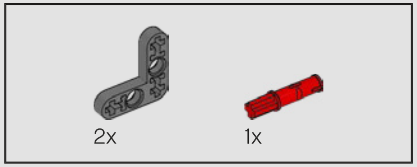

140

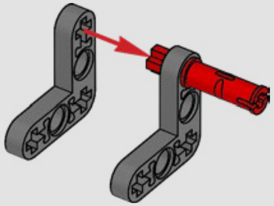

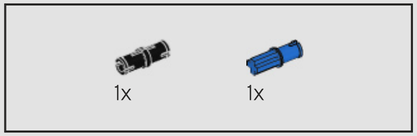

141

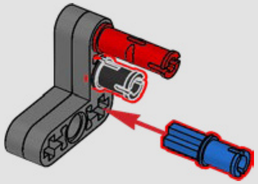

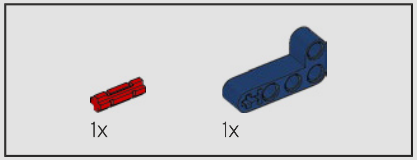

142

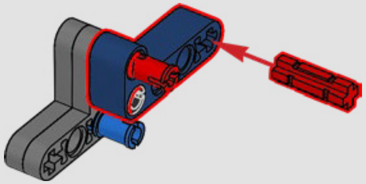

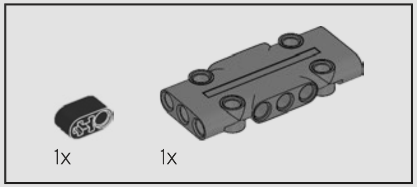

143

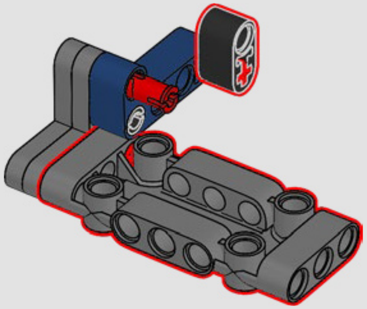

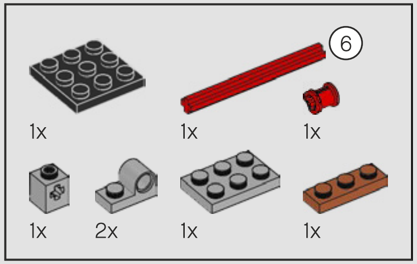

⑥
1x
1x
1x
1x
2x
1x
1x

144

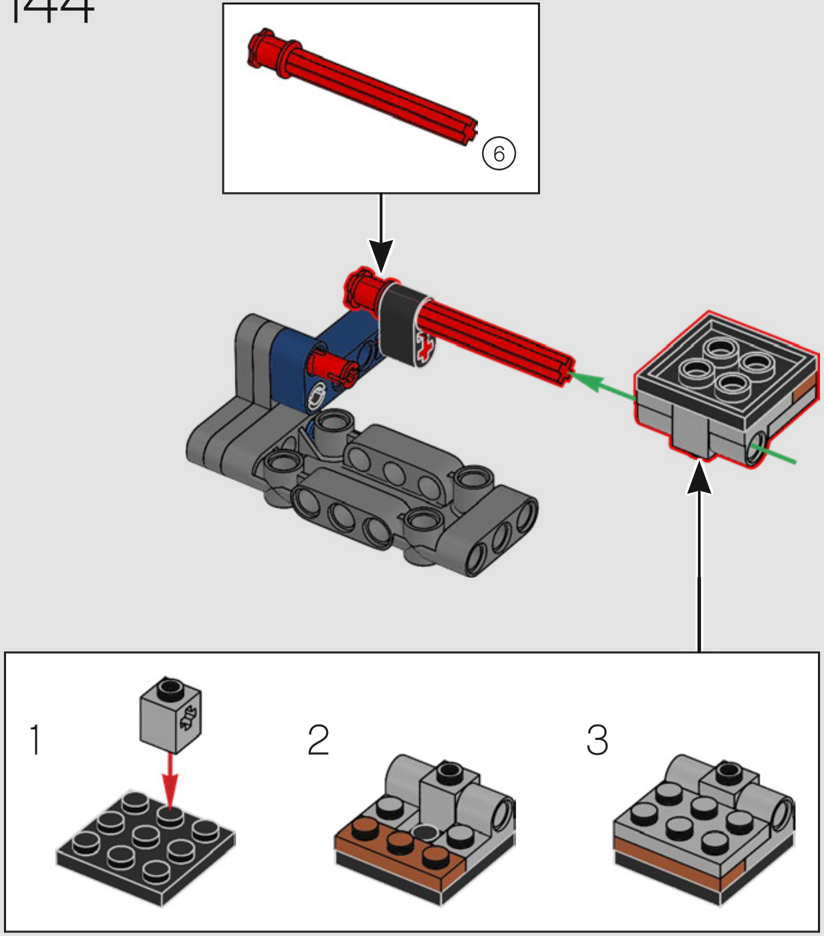

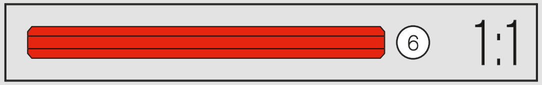

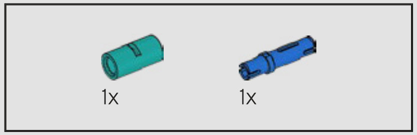

145

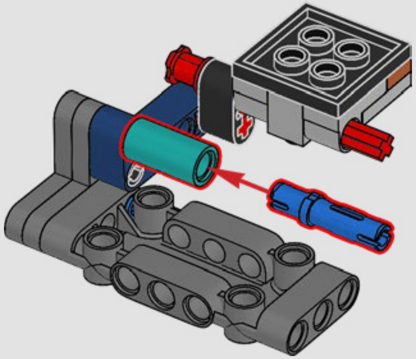

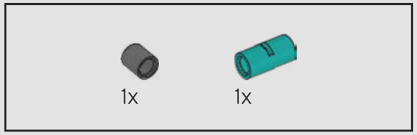

146

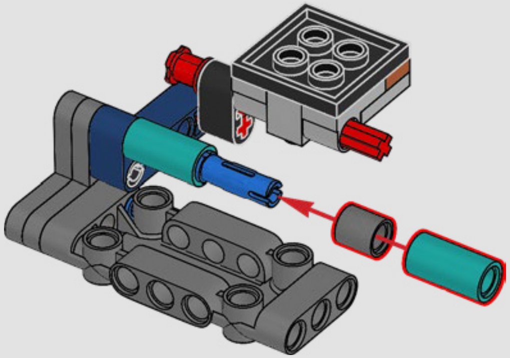

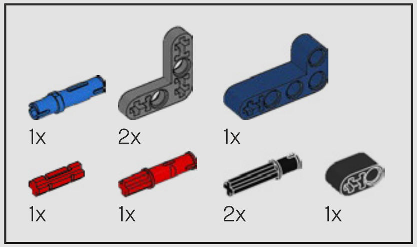
1x
2x
1x
1x
1x
2x
1x

147

1

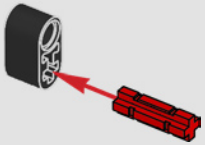

2

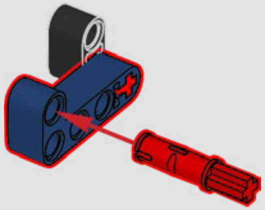

3

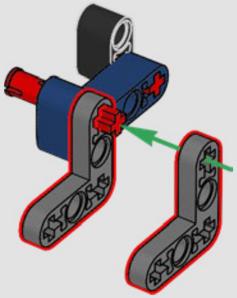

4

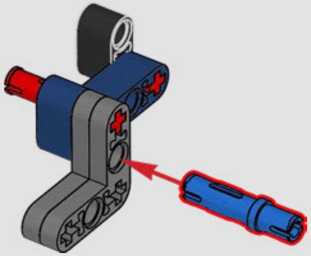

5

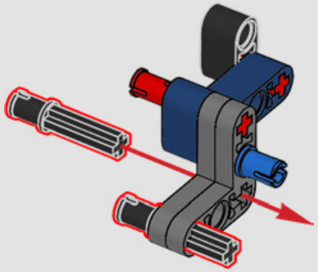

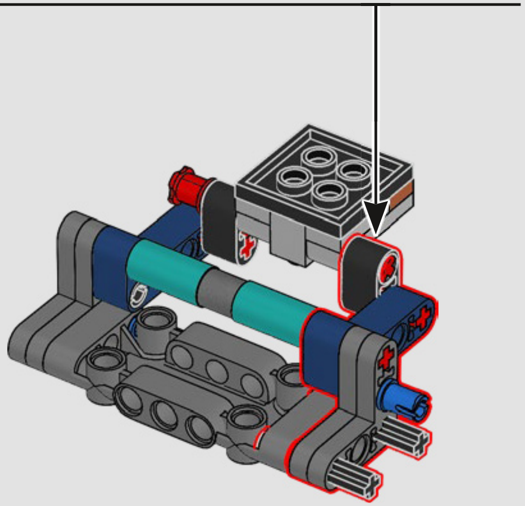

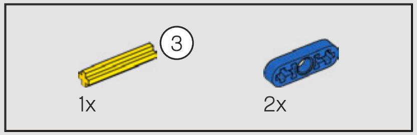

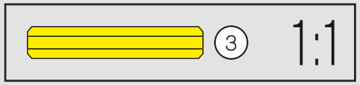

148

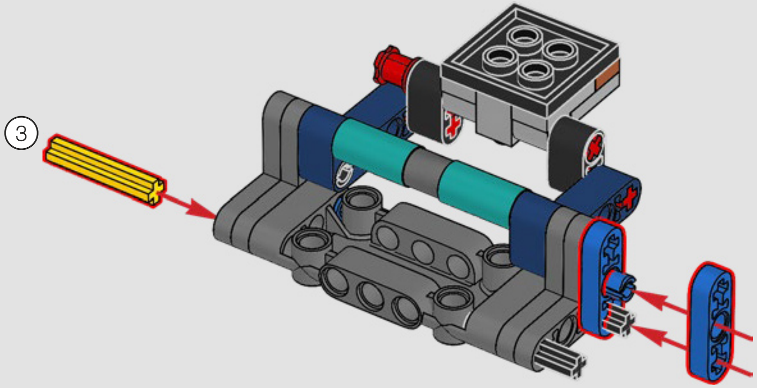

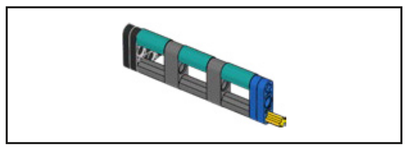

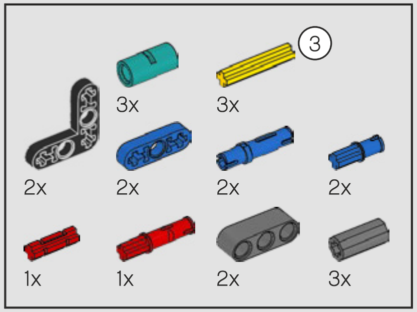
3
3x
3x
2x
2x
2x
2x
1x
1x
2x
3x

149

1

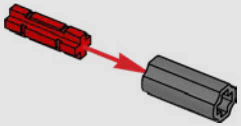

2

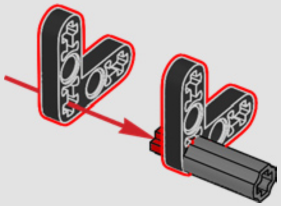

3

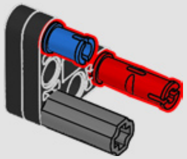

4

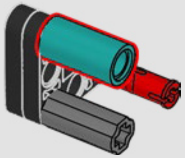

5

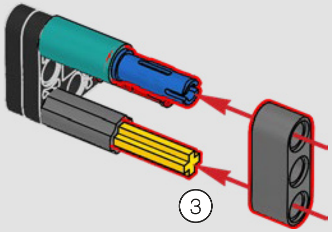

6

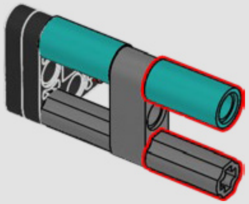

7

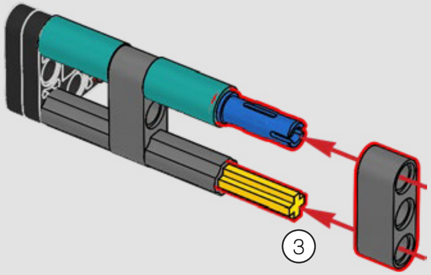

8

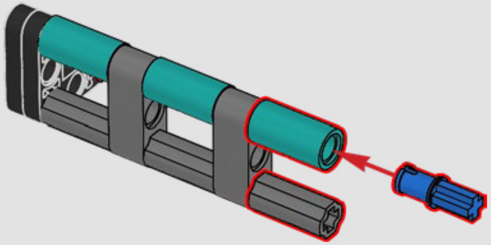

9

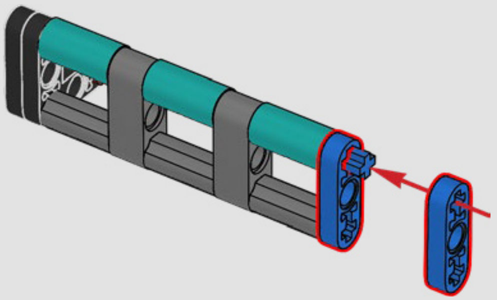

10

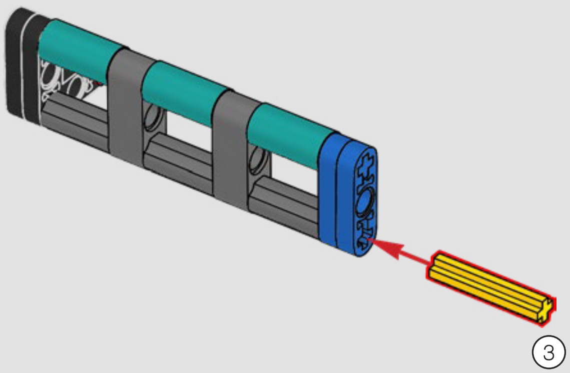

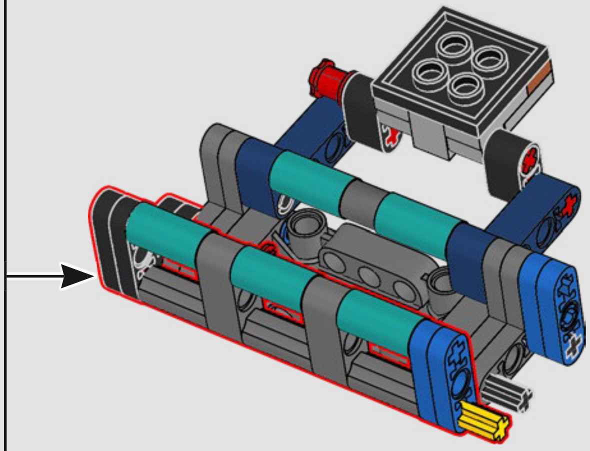

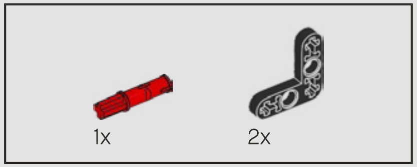

150

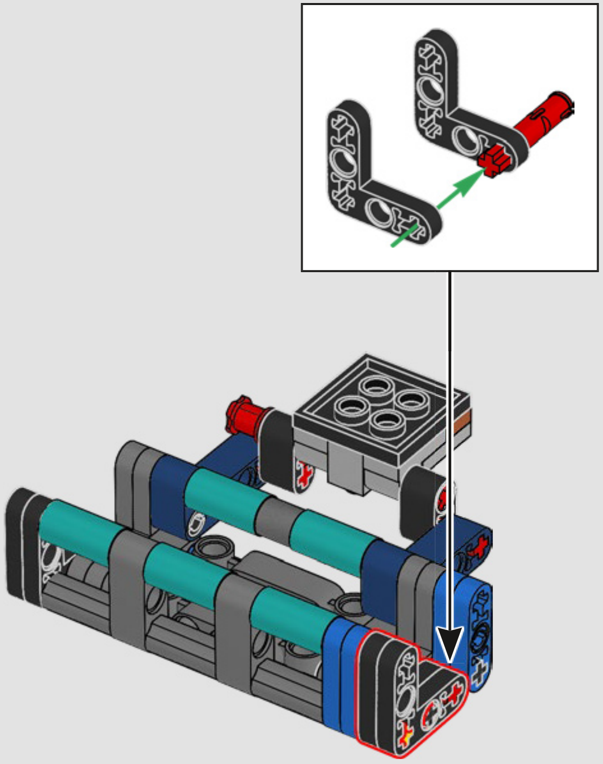

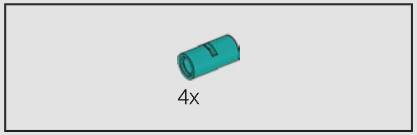

151

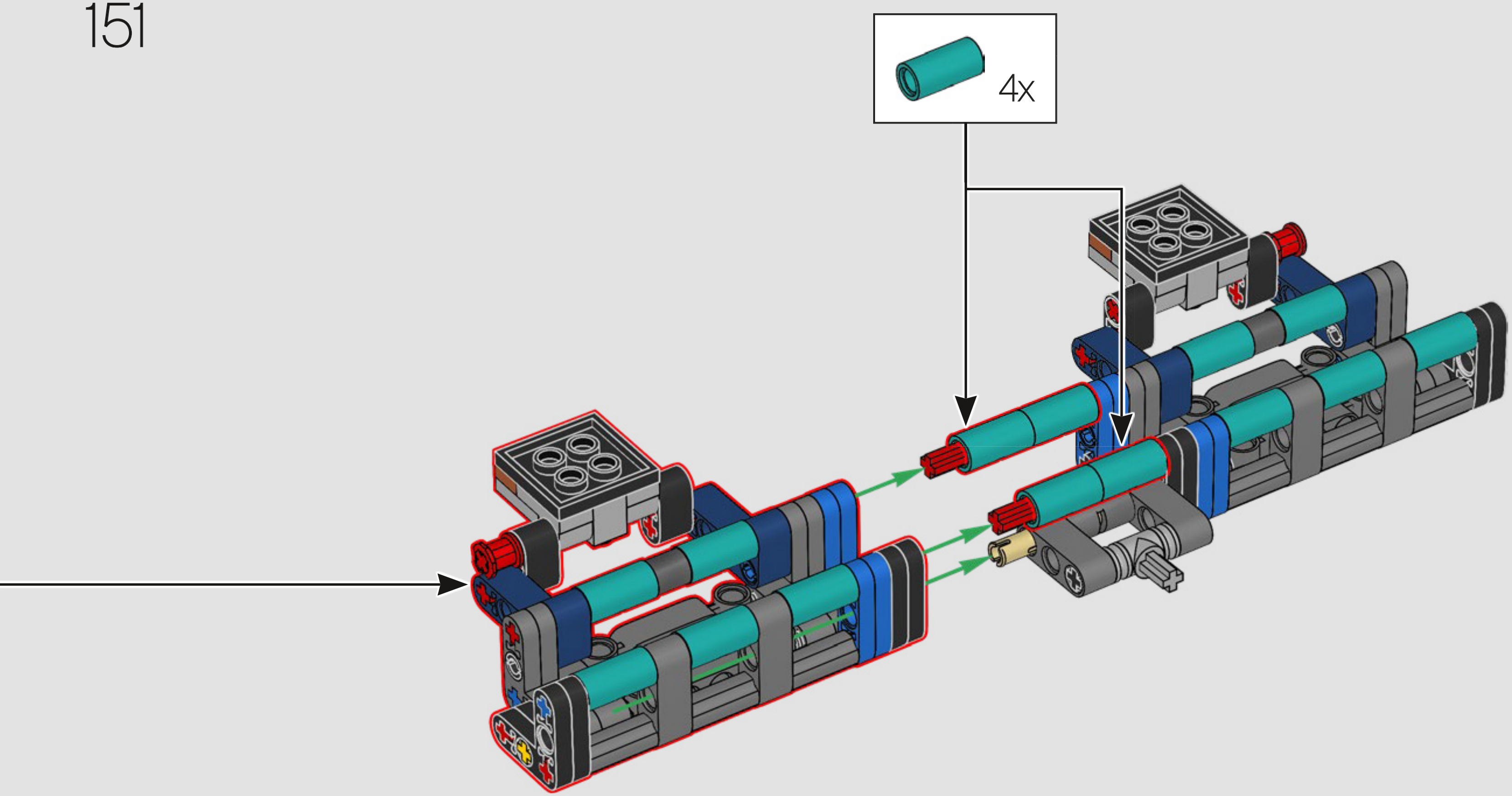

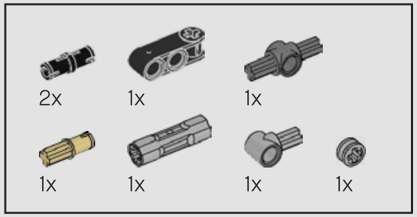
2x
1x
1x
1x
1x
1x
1x

152

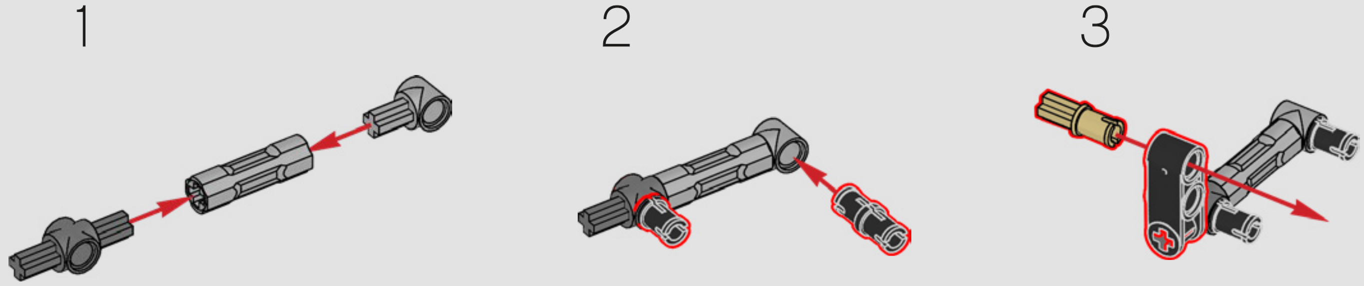

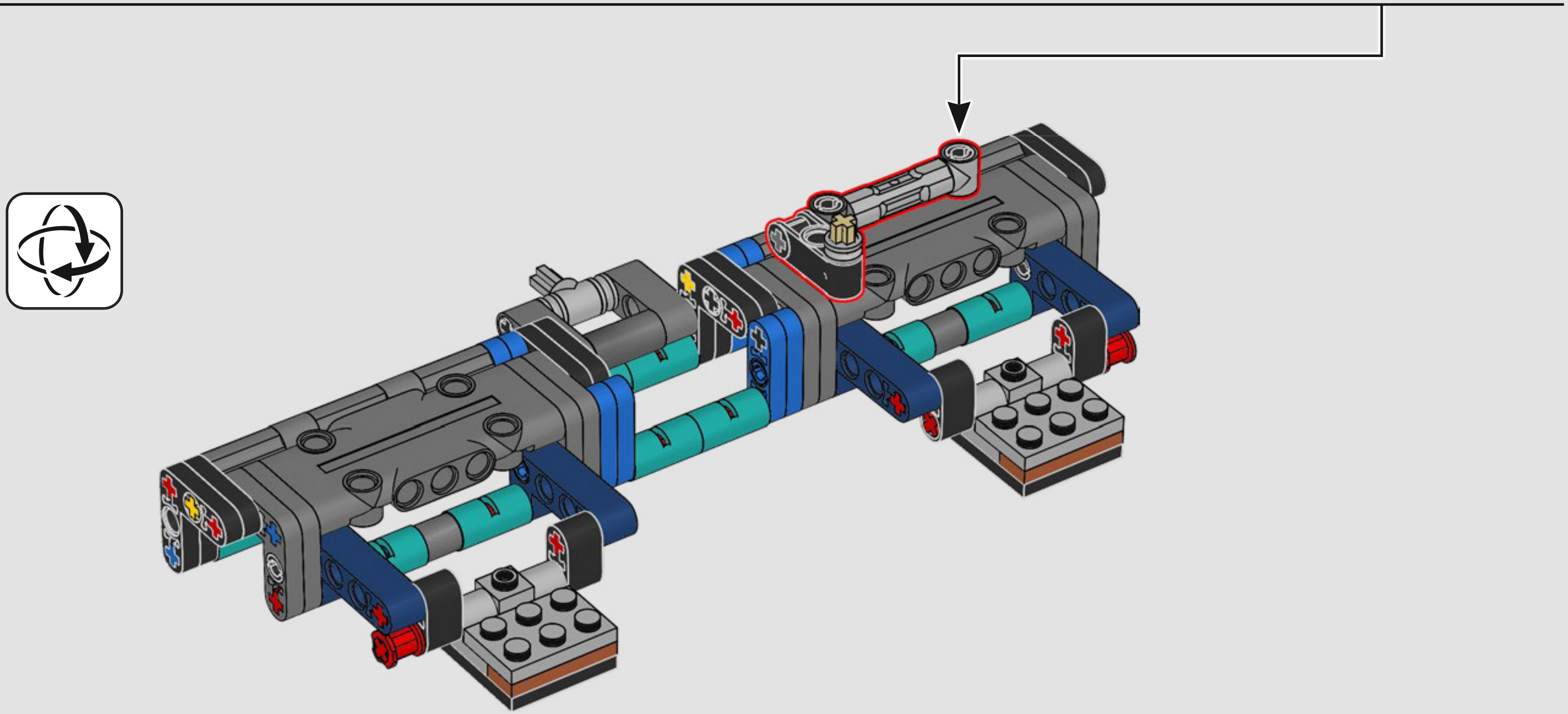

153

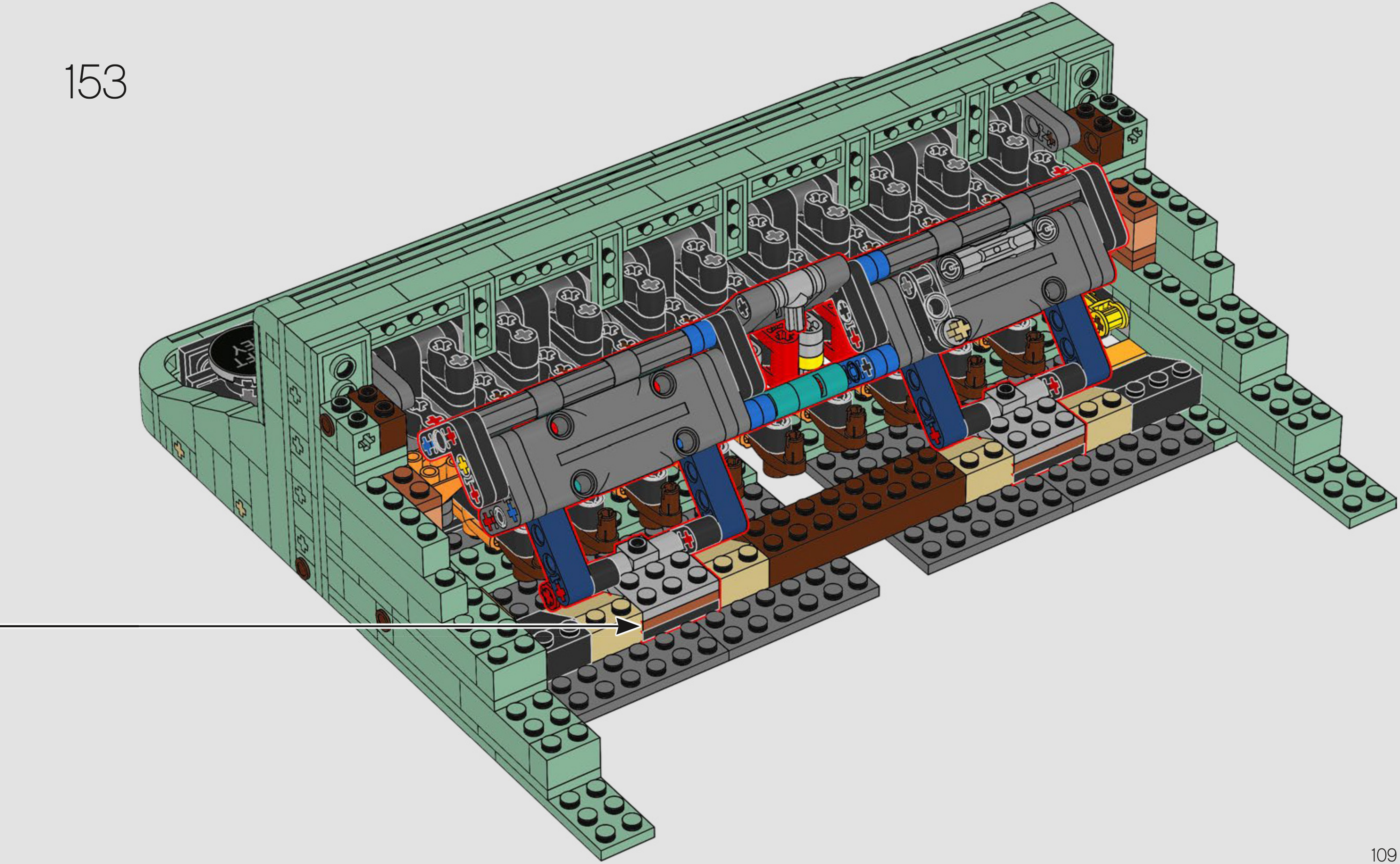

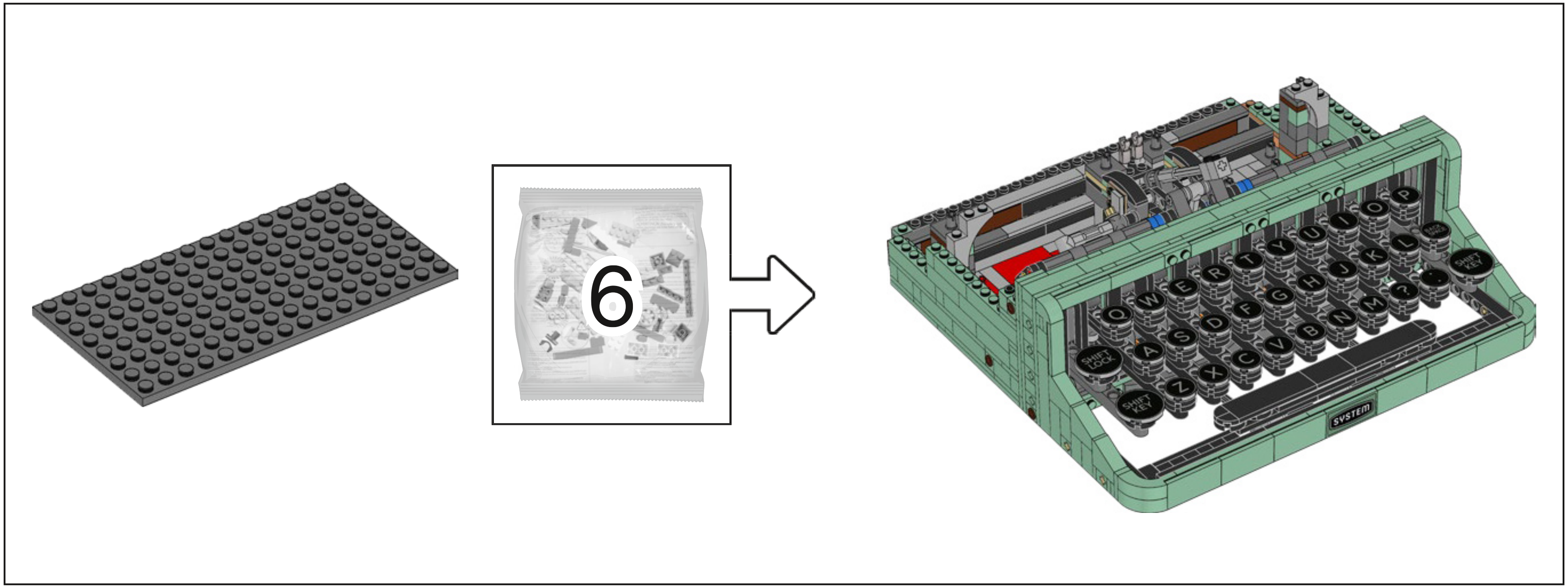
6

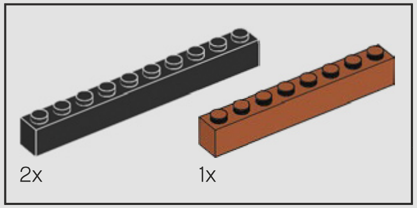

154

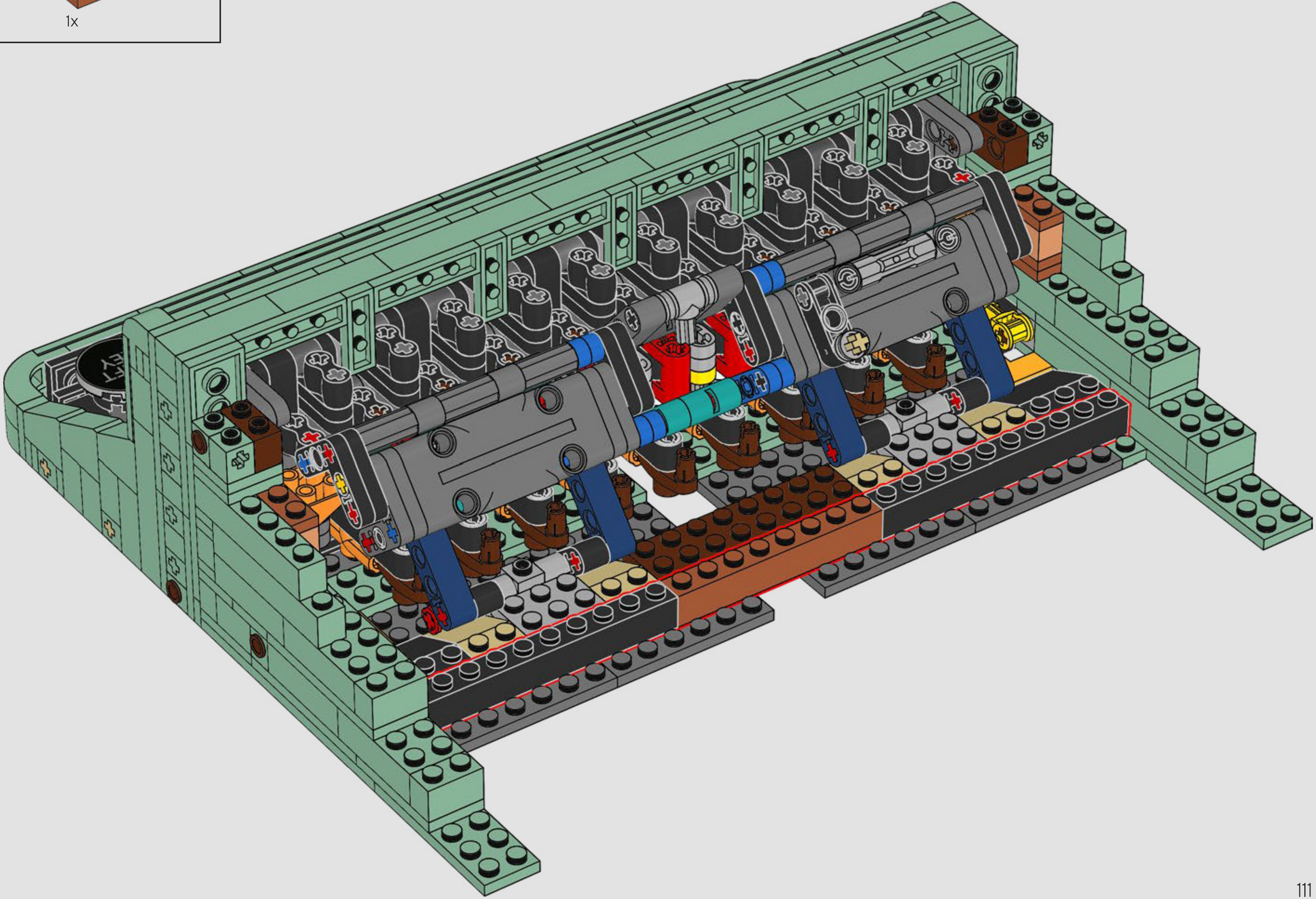

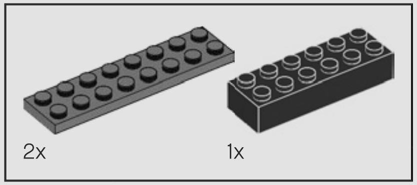

155

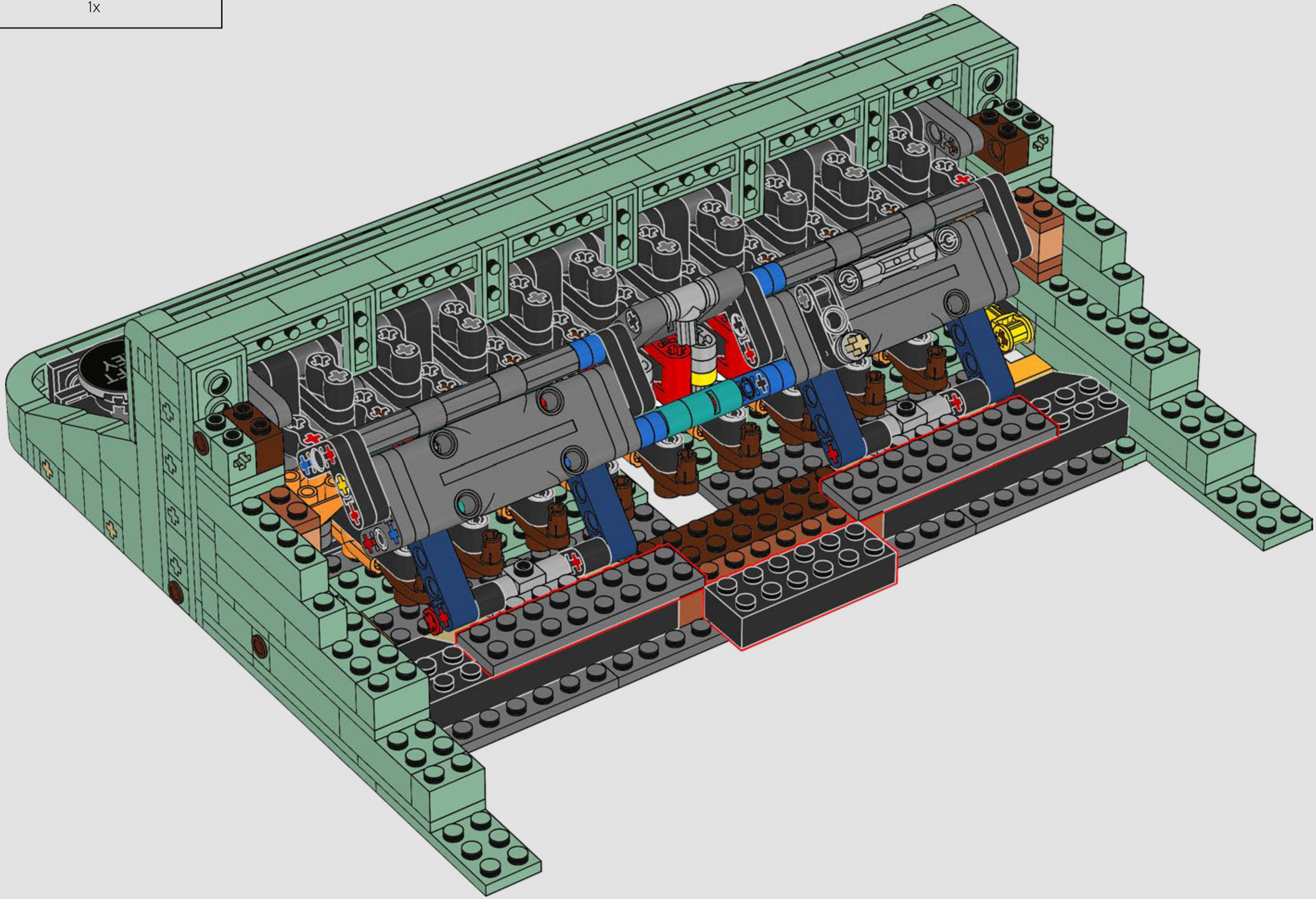

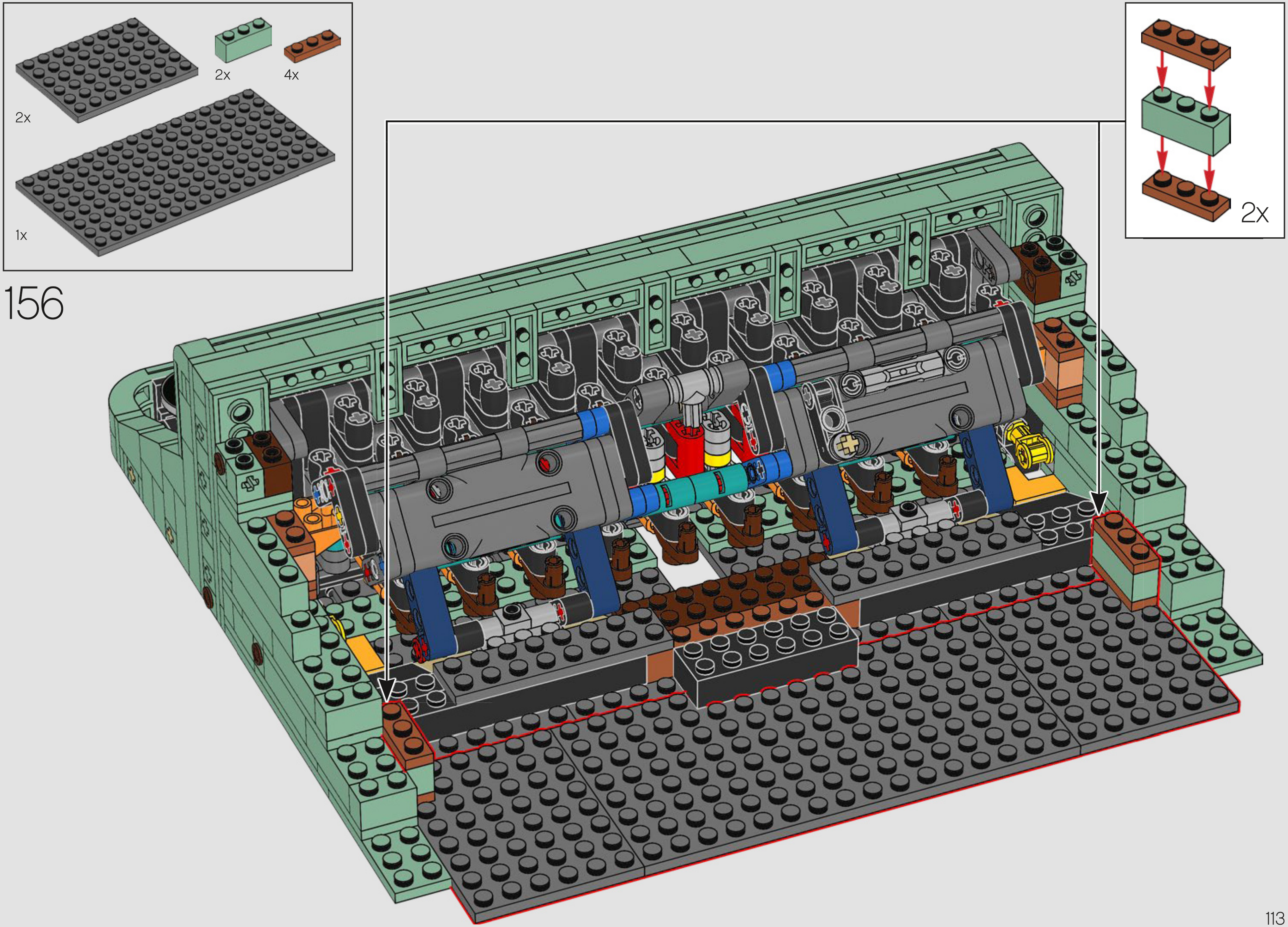
2x
4x
2x
1x
2x

156

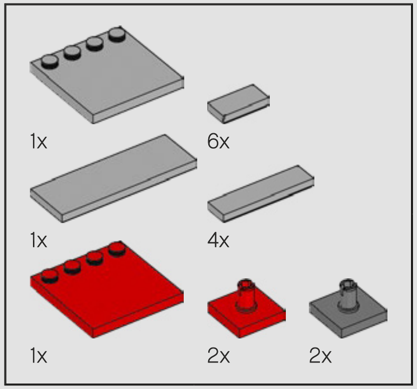
1x
6x
1x
4x
1x
2x
2x

157

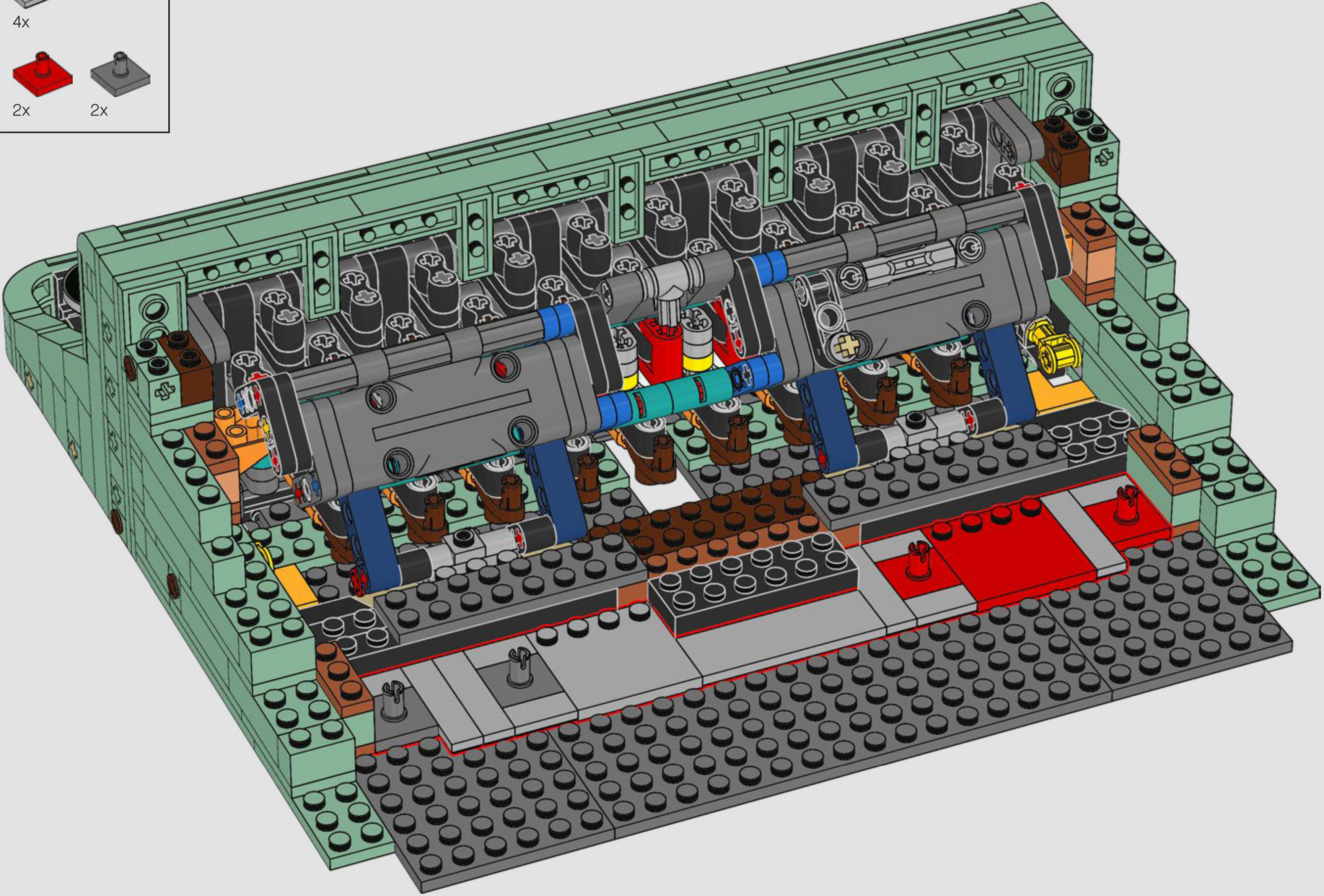

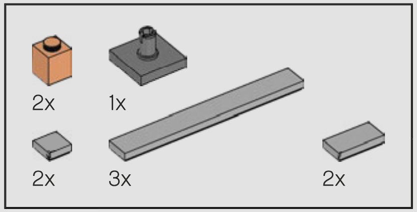
2x
1x
2x
3x
2x

158

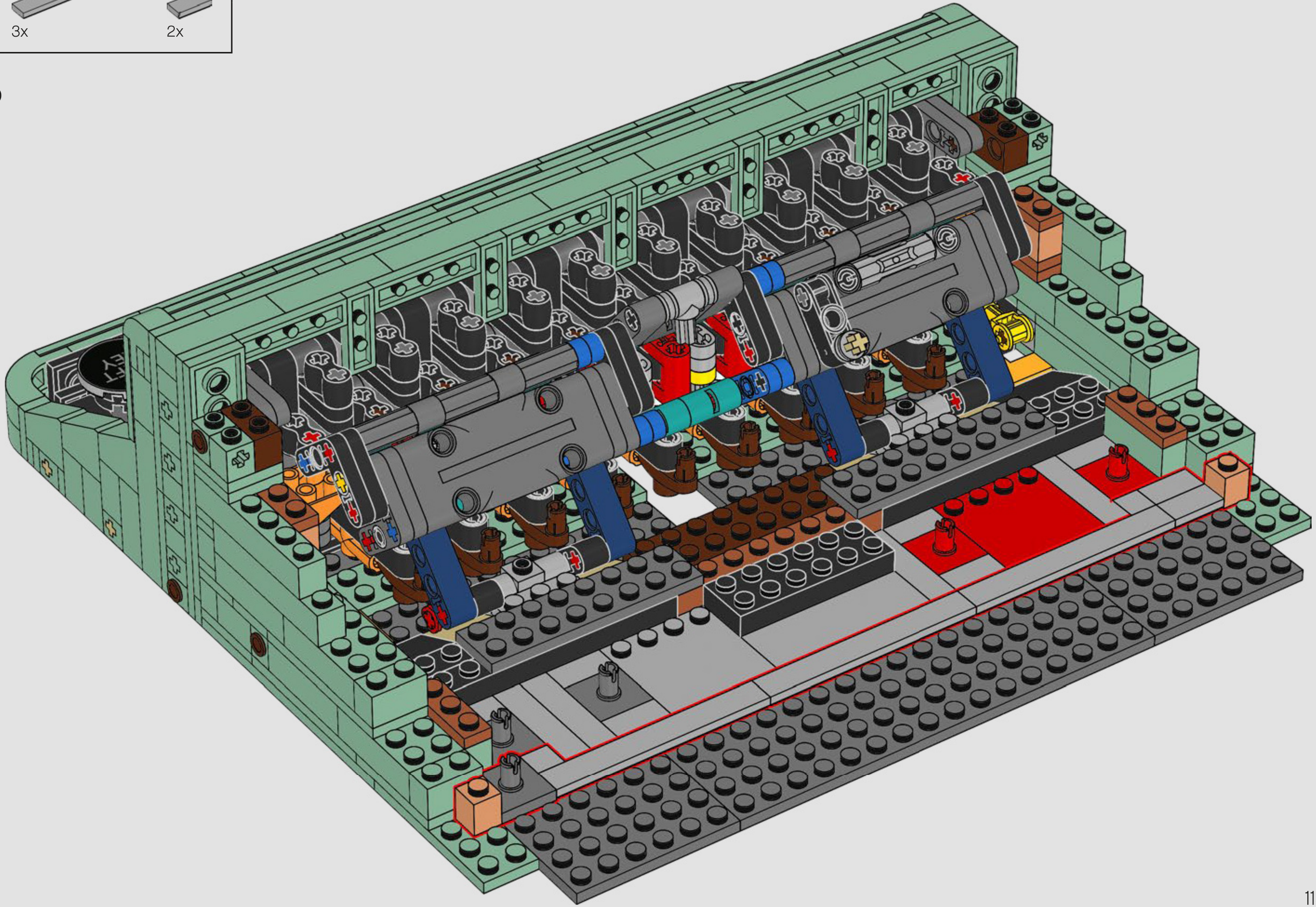

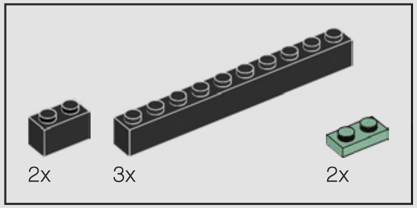

159

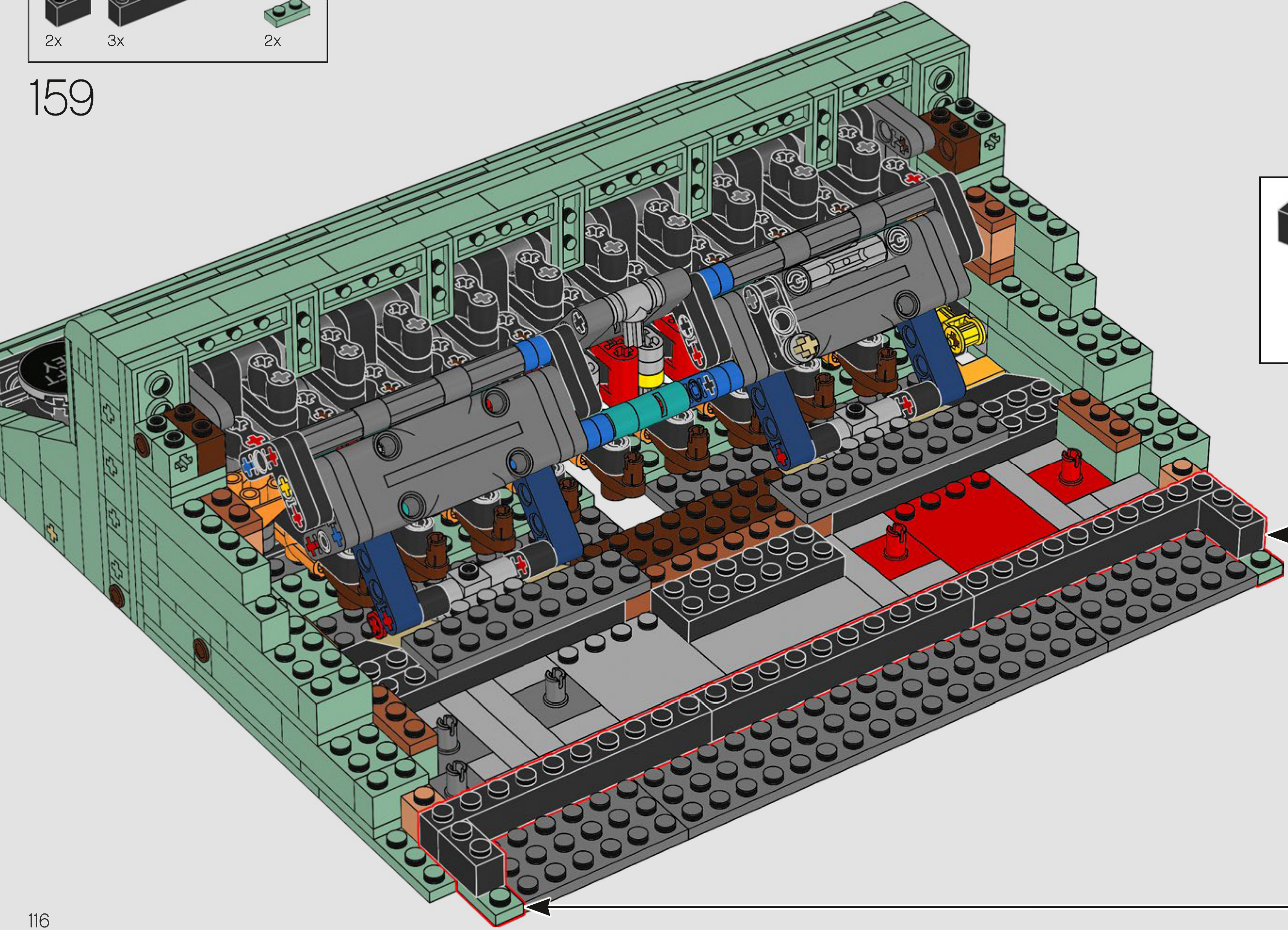

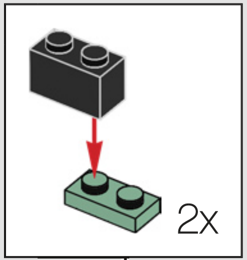

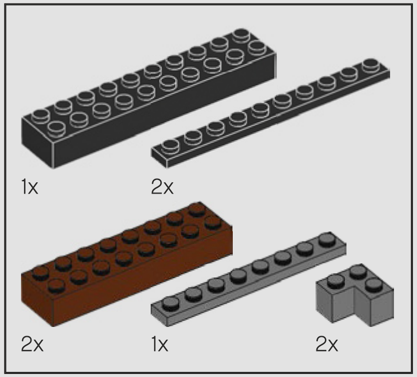
1x
2x
2x
1x
2x

160

1

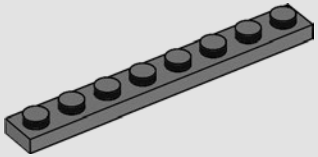

2

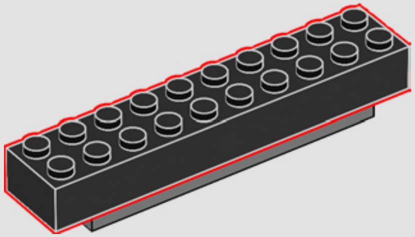

3

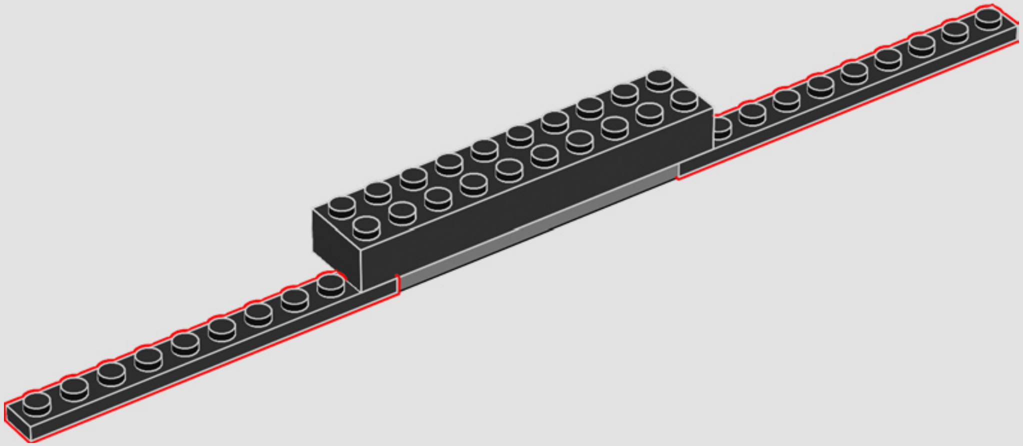

4

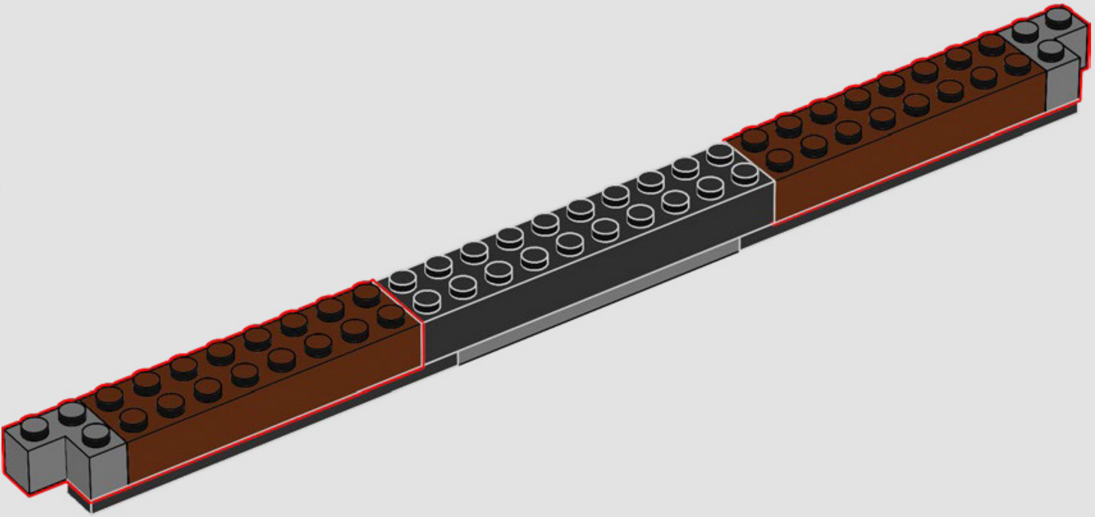

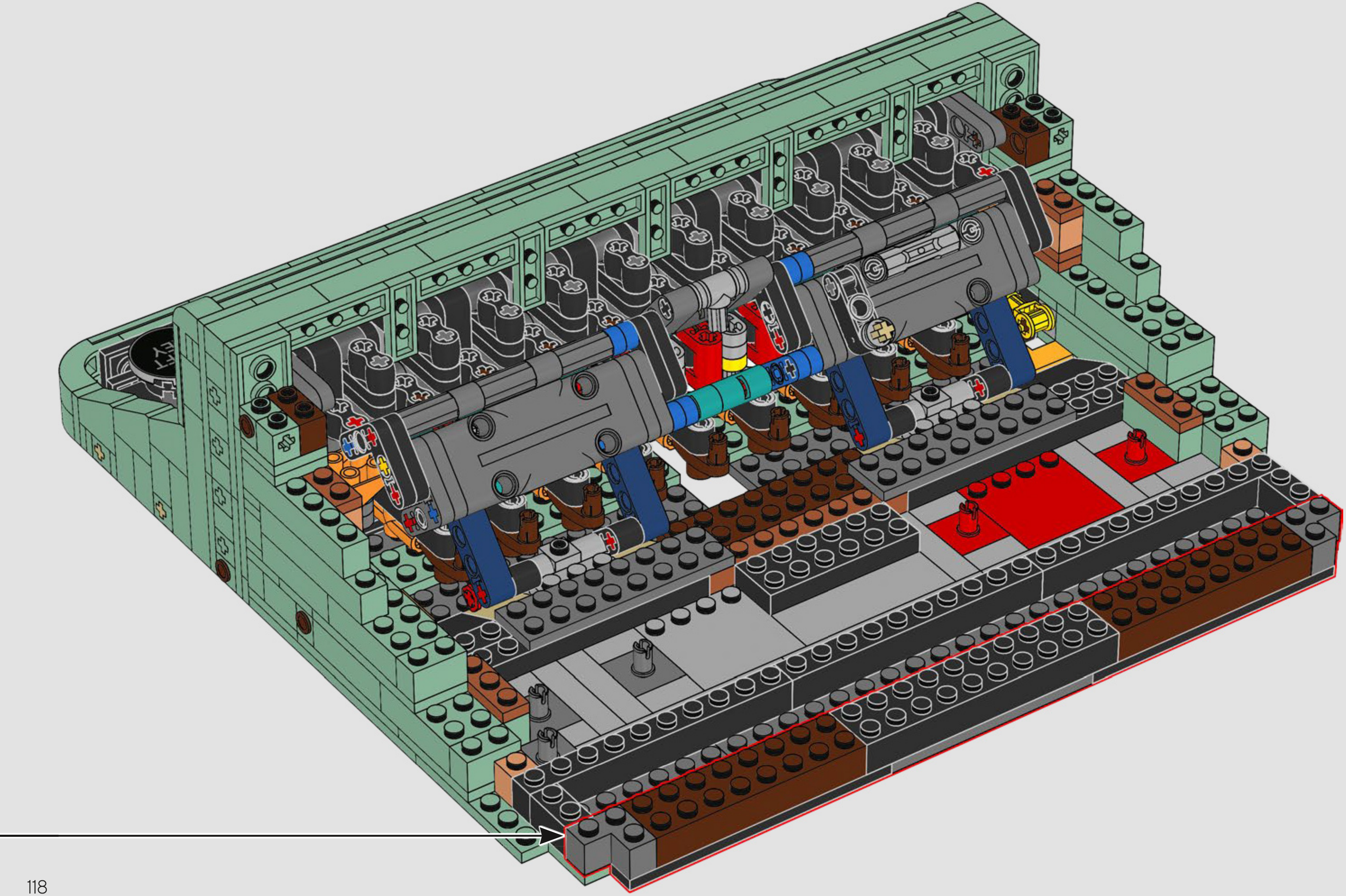

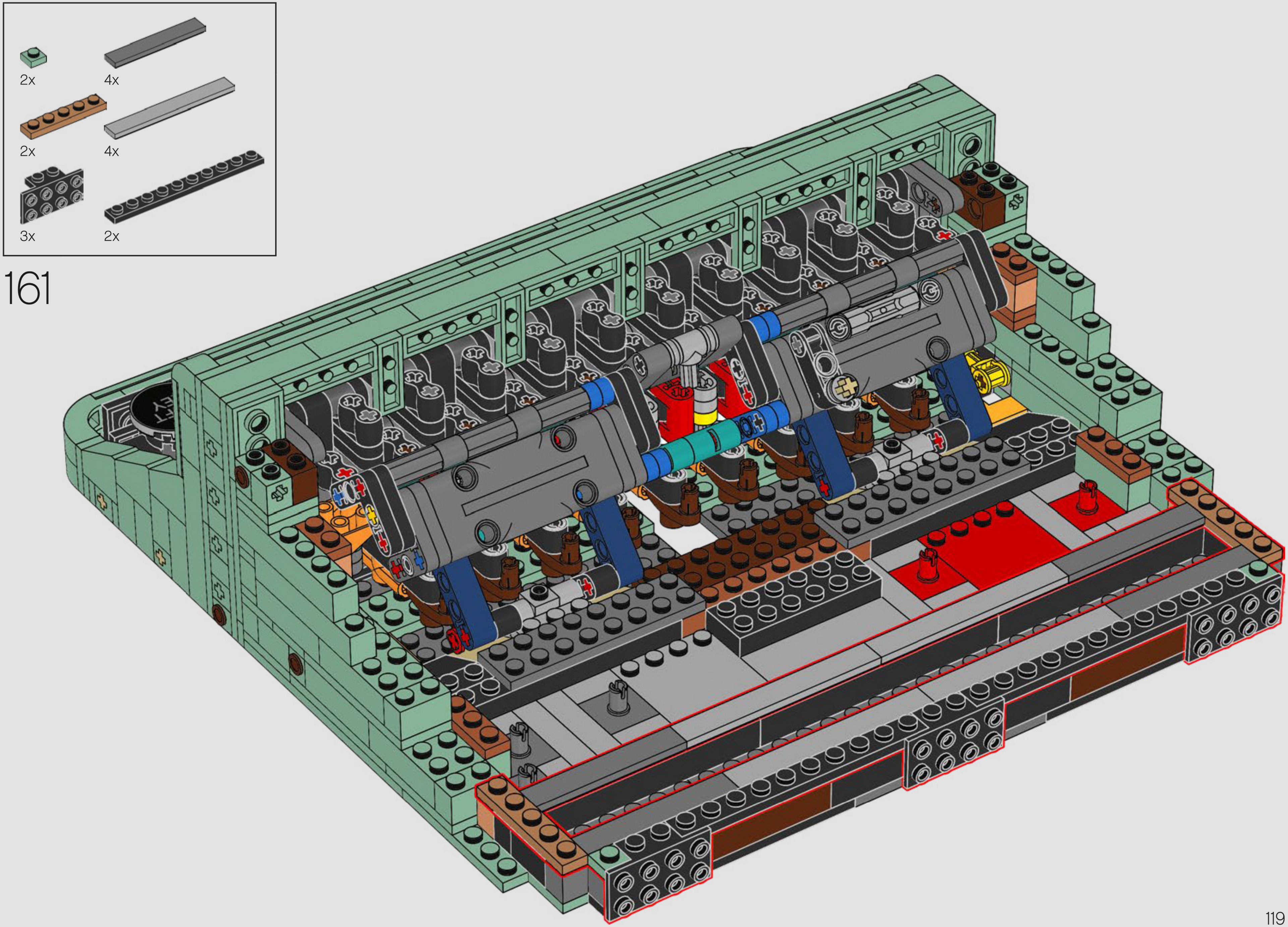
2x
4x
2x
4x
3x
2x

161

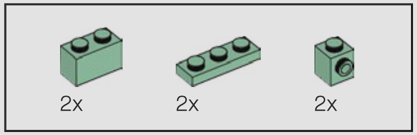

162

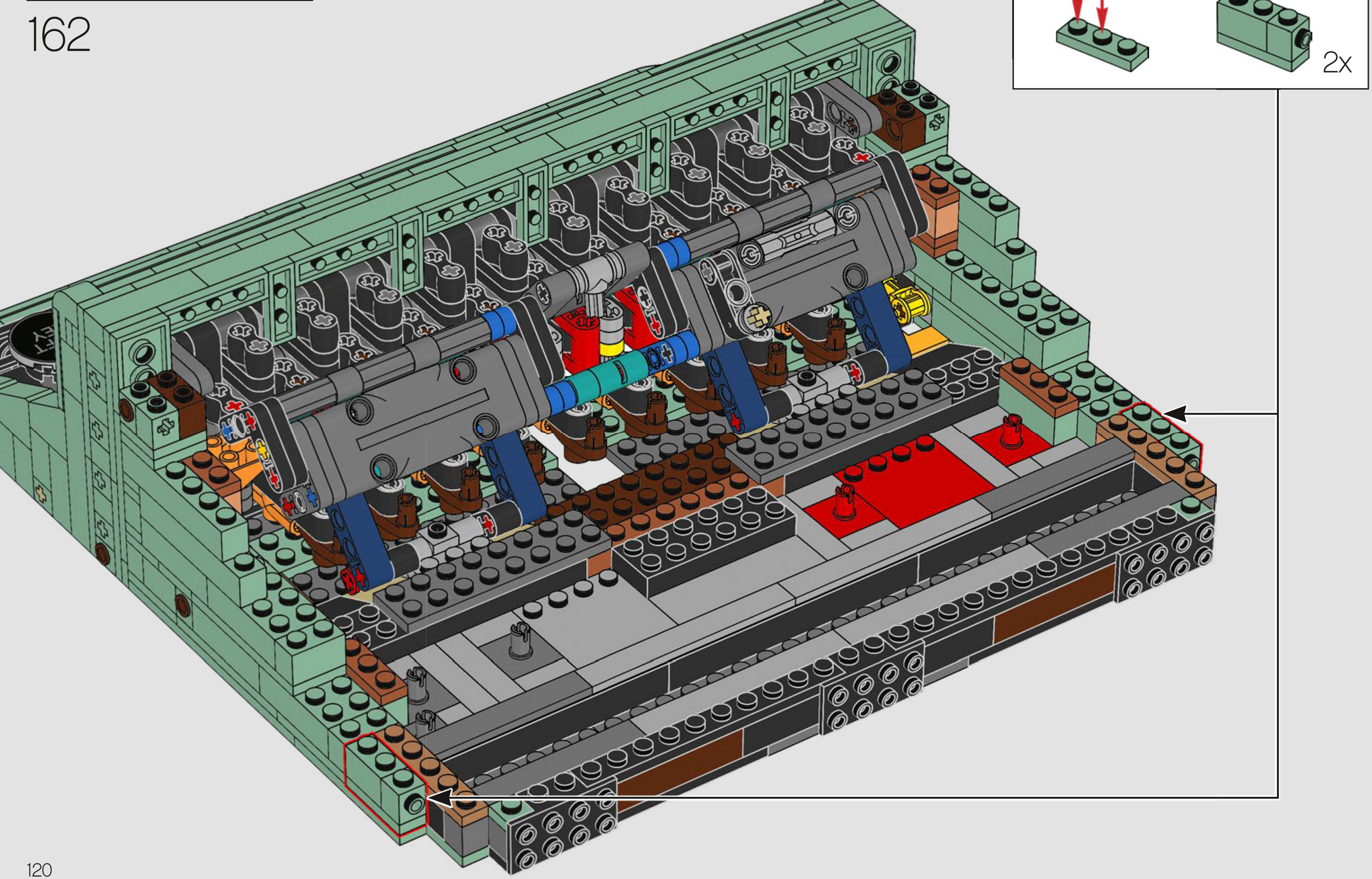

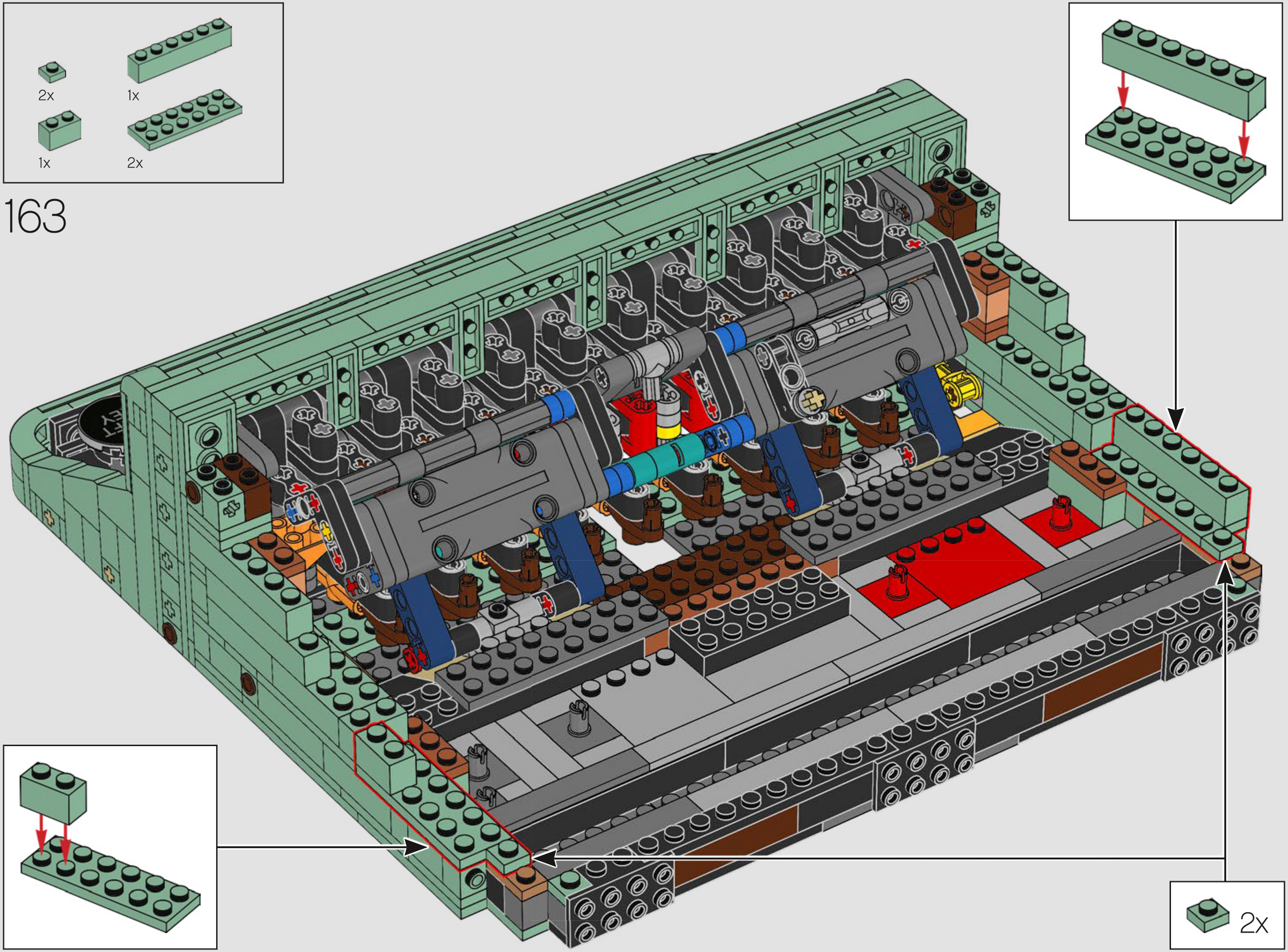
2x
1x
1x
2x
2x

163

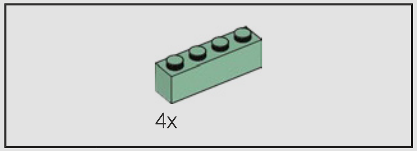

164

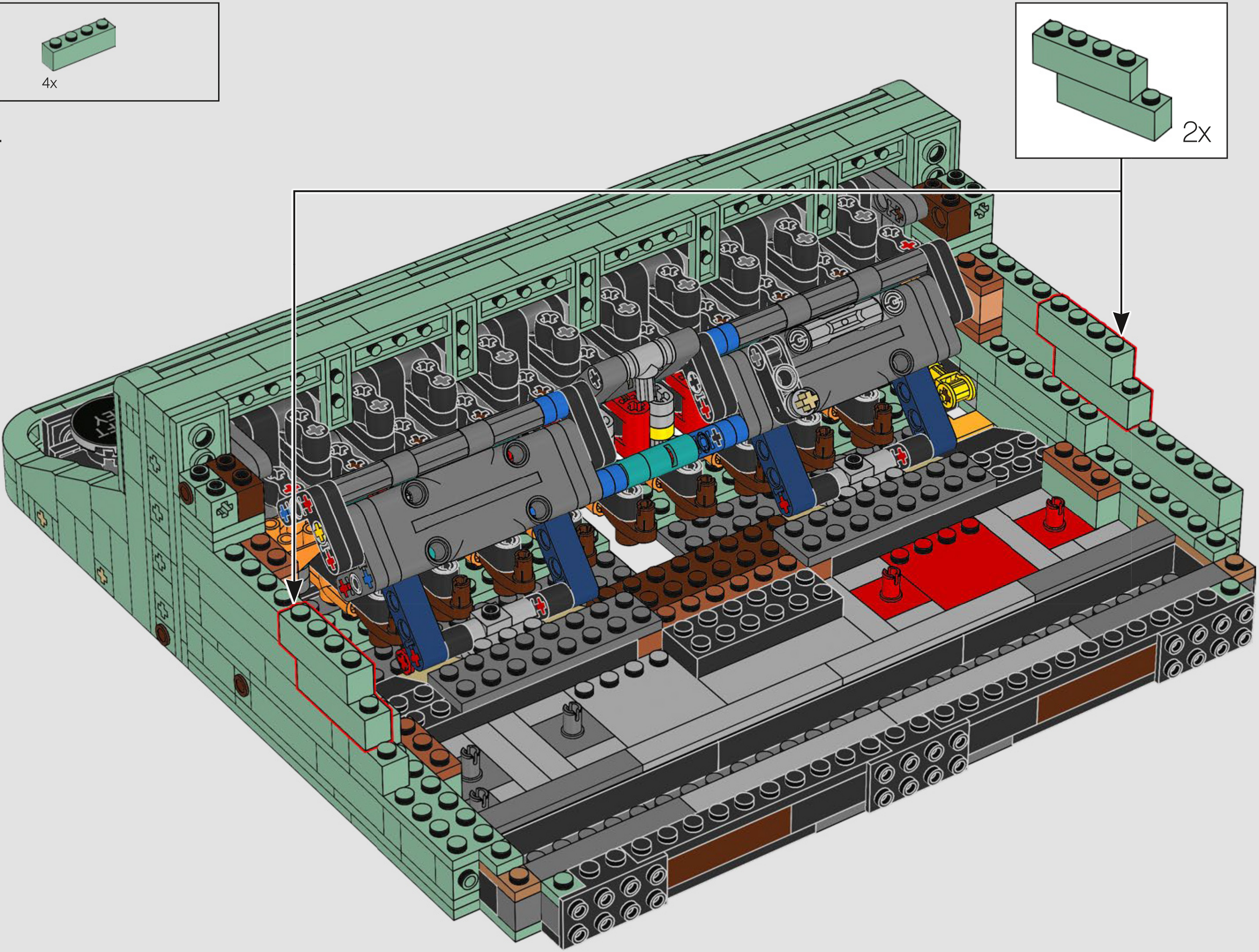

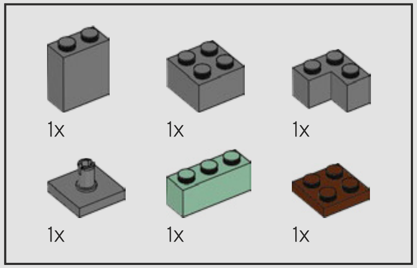
1x
1x
1x
1x
1x
1x

165

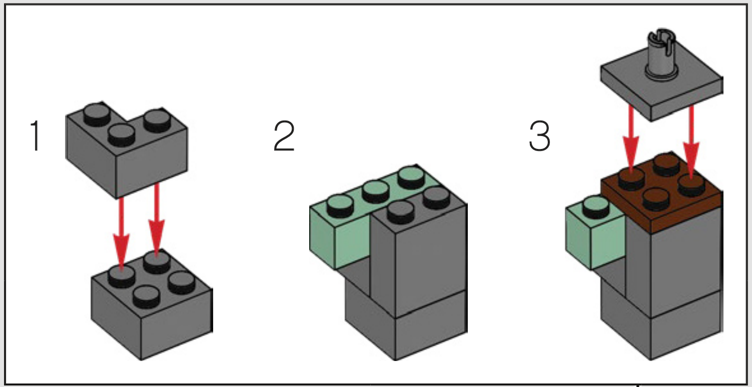

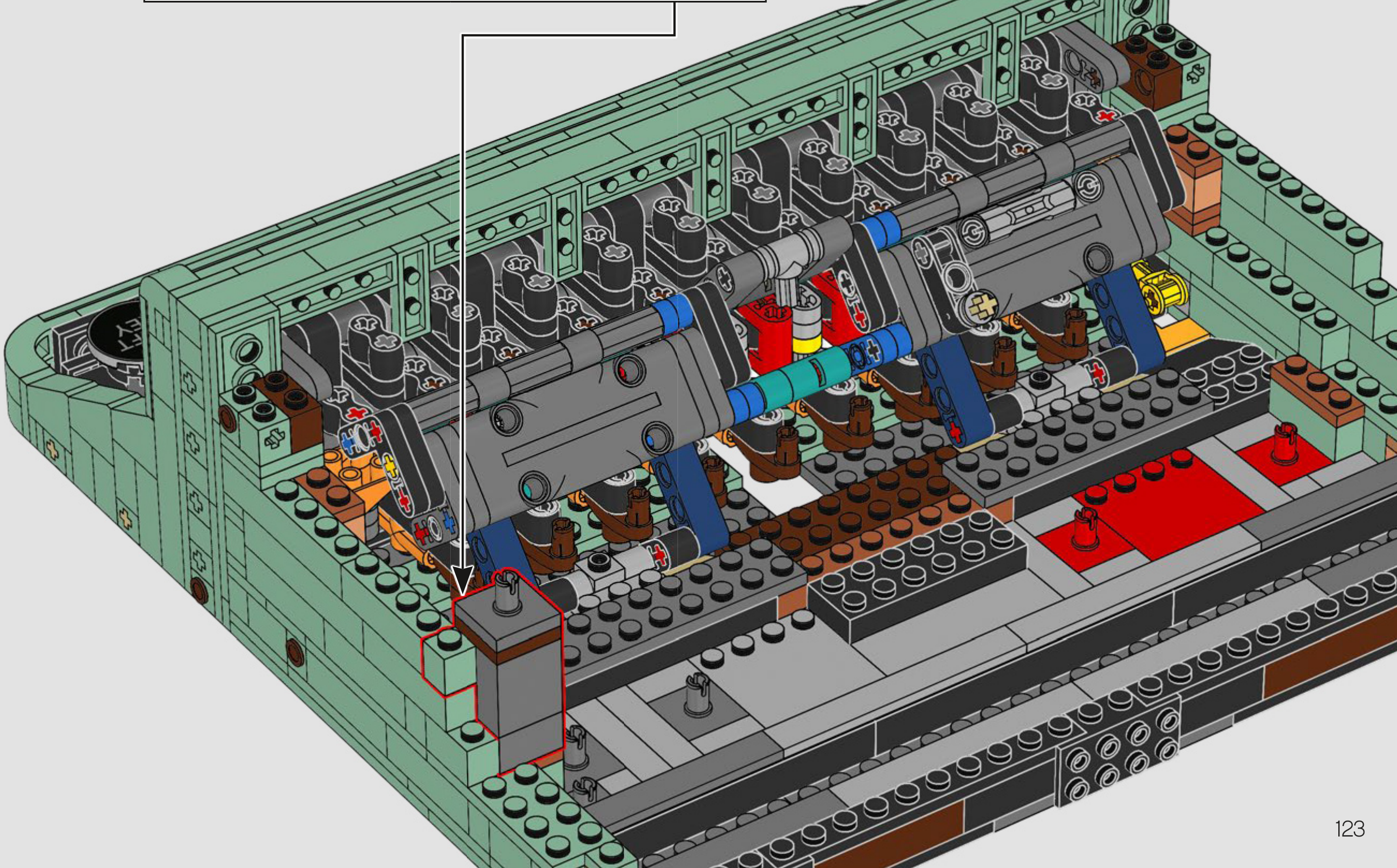

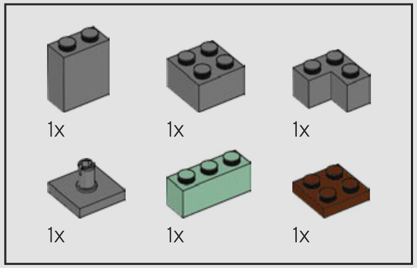
1x
1x
1x
1x
1x
1x

166

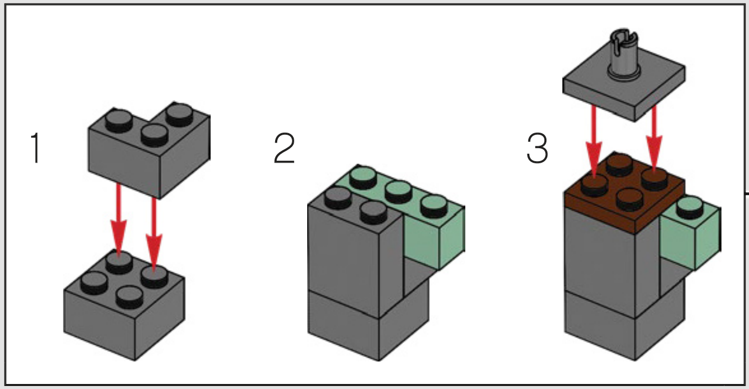

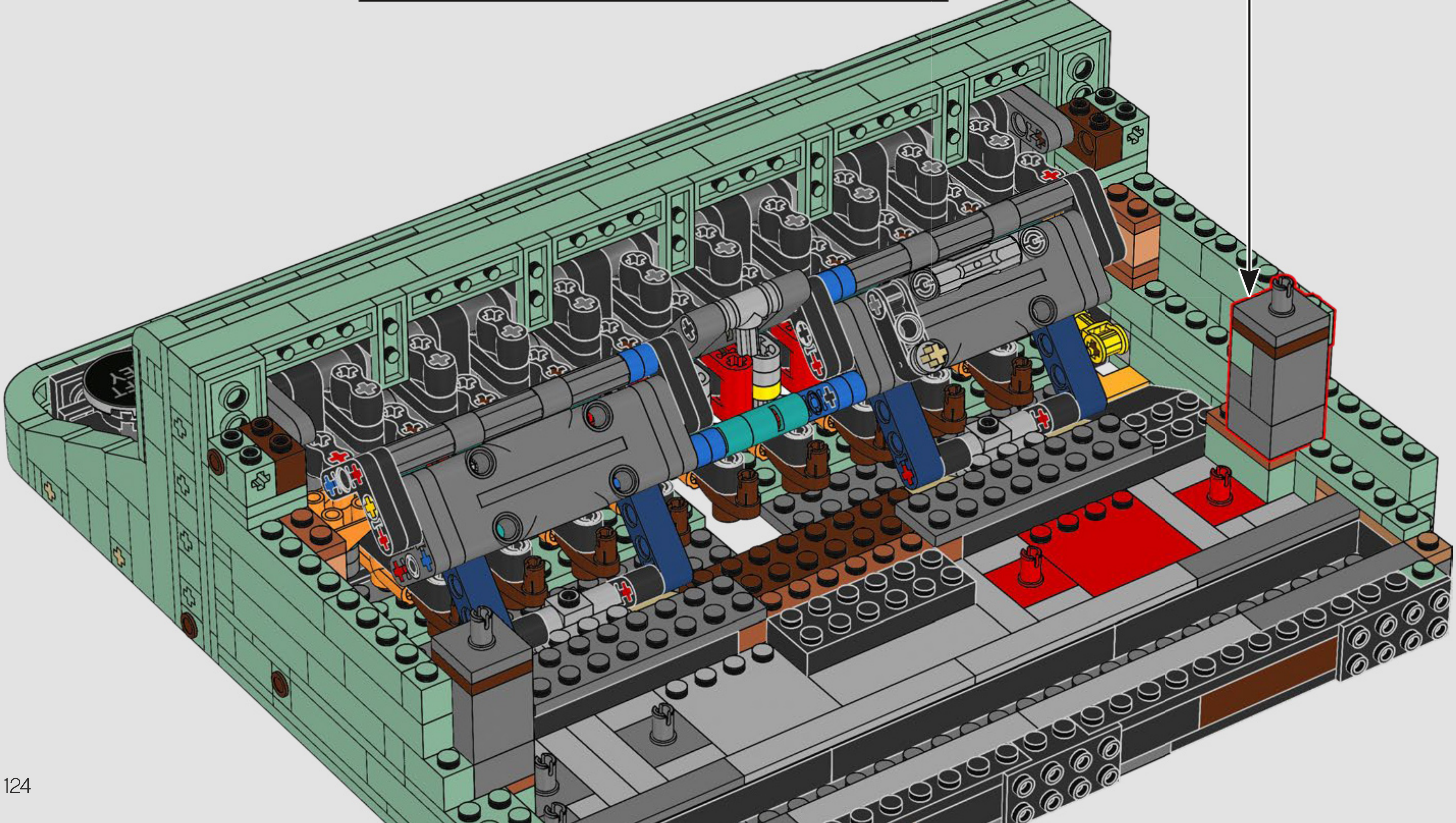

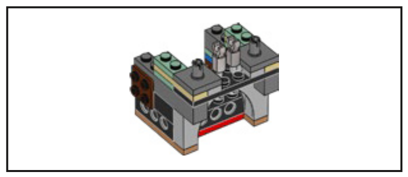

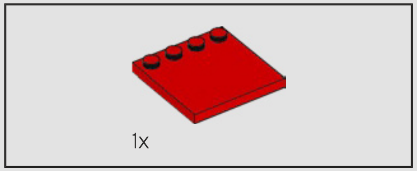

167

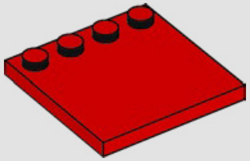

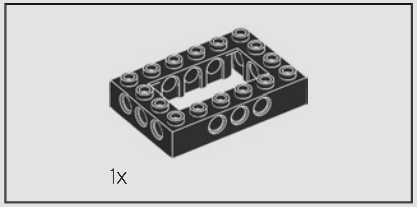

168

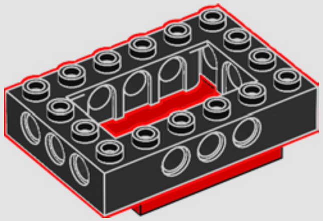

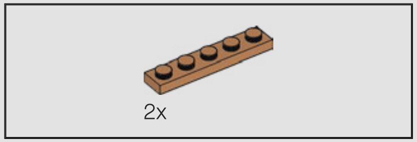

169

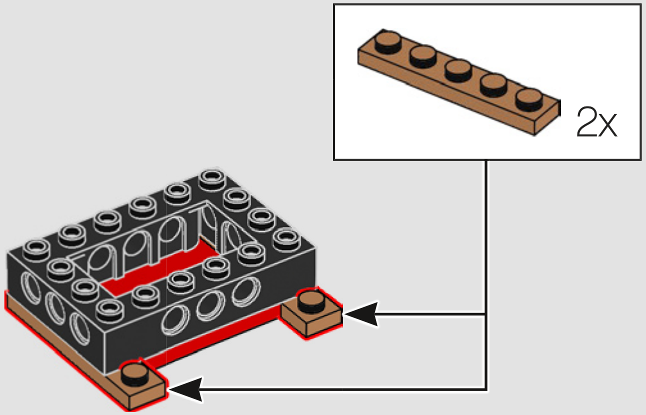

170

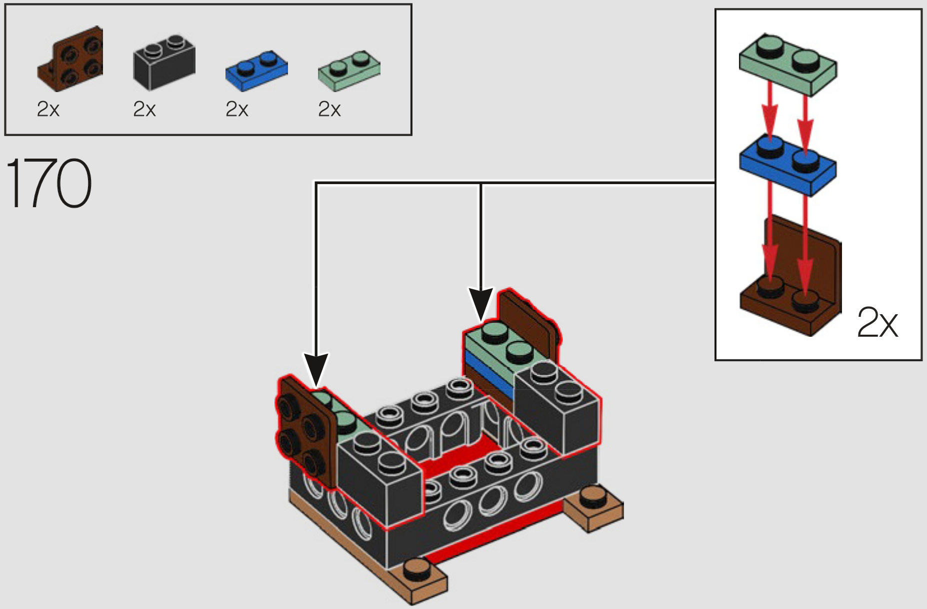
2x
2x
2x
2x
2x

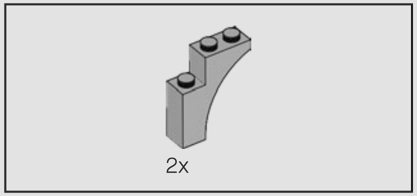

171

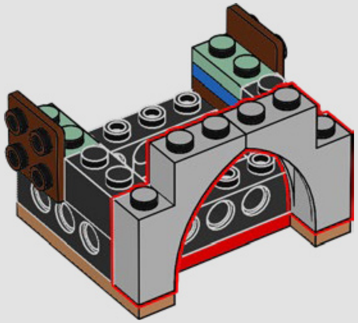

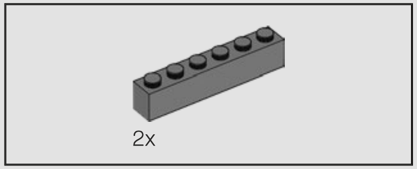

172

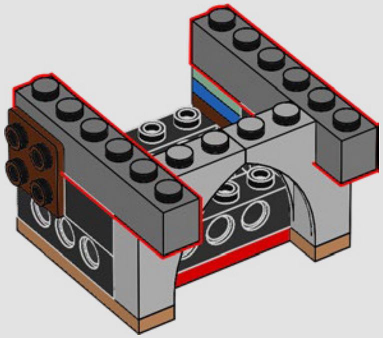

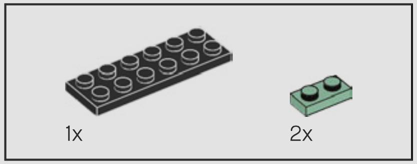

173

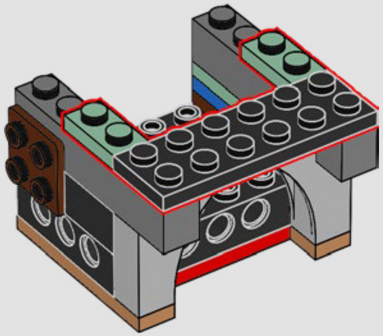

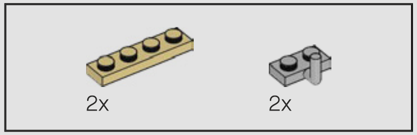

174

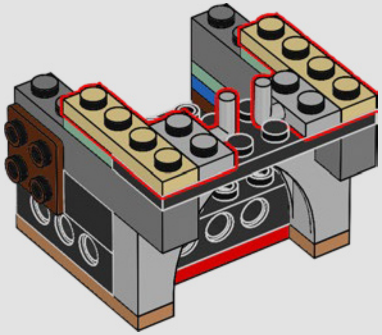

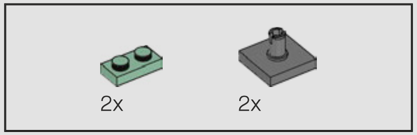

175

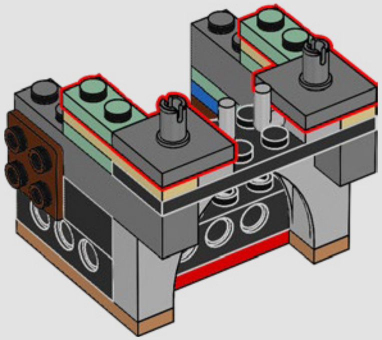

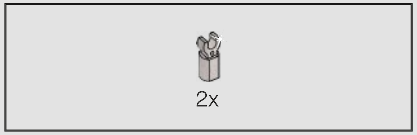

176

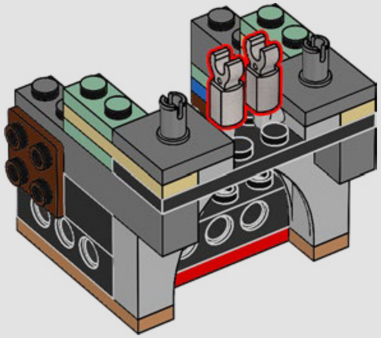

177

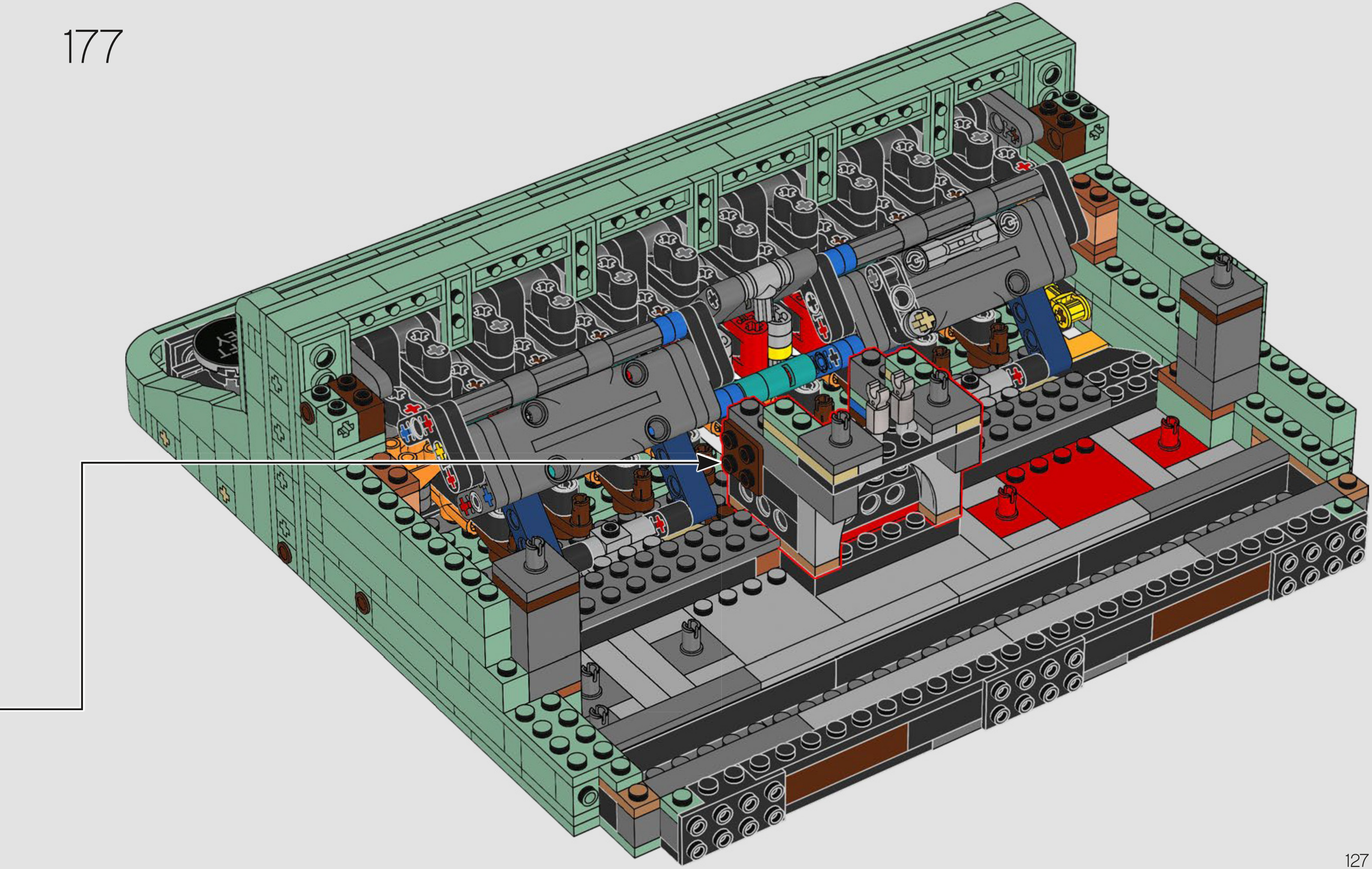

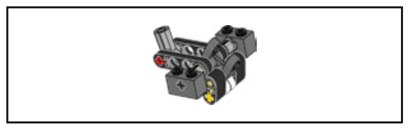

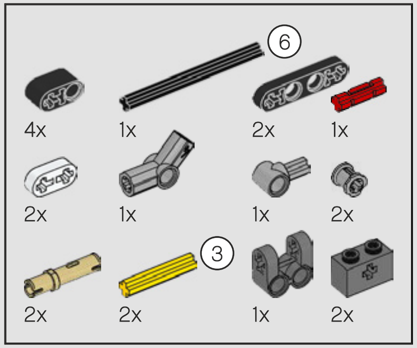
6
4x
1x
2x
1x
2x
1x
1x
2x
2x
3
2x
1x
2x

178

1

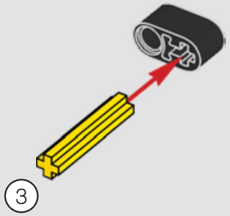

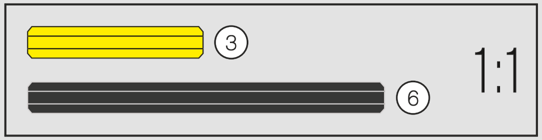

2

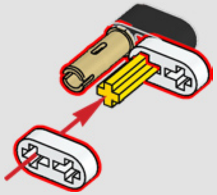

3

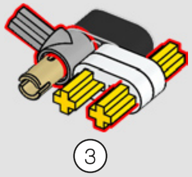

4

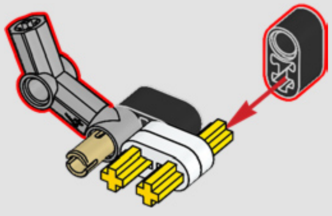

5

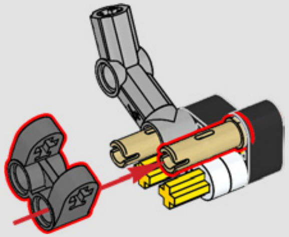

6

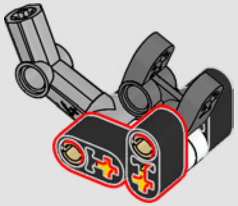

1

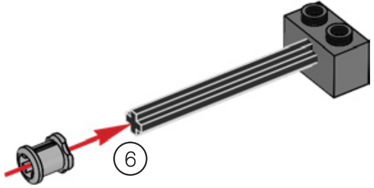

2

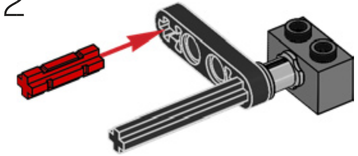

7

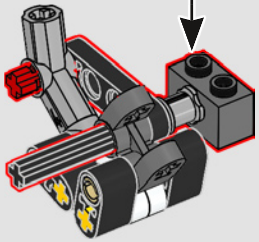

8

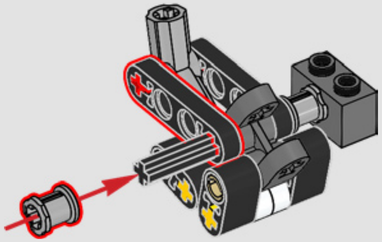

9

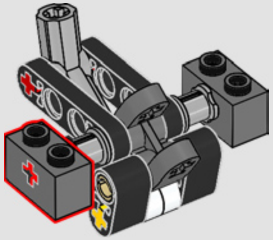

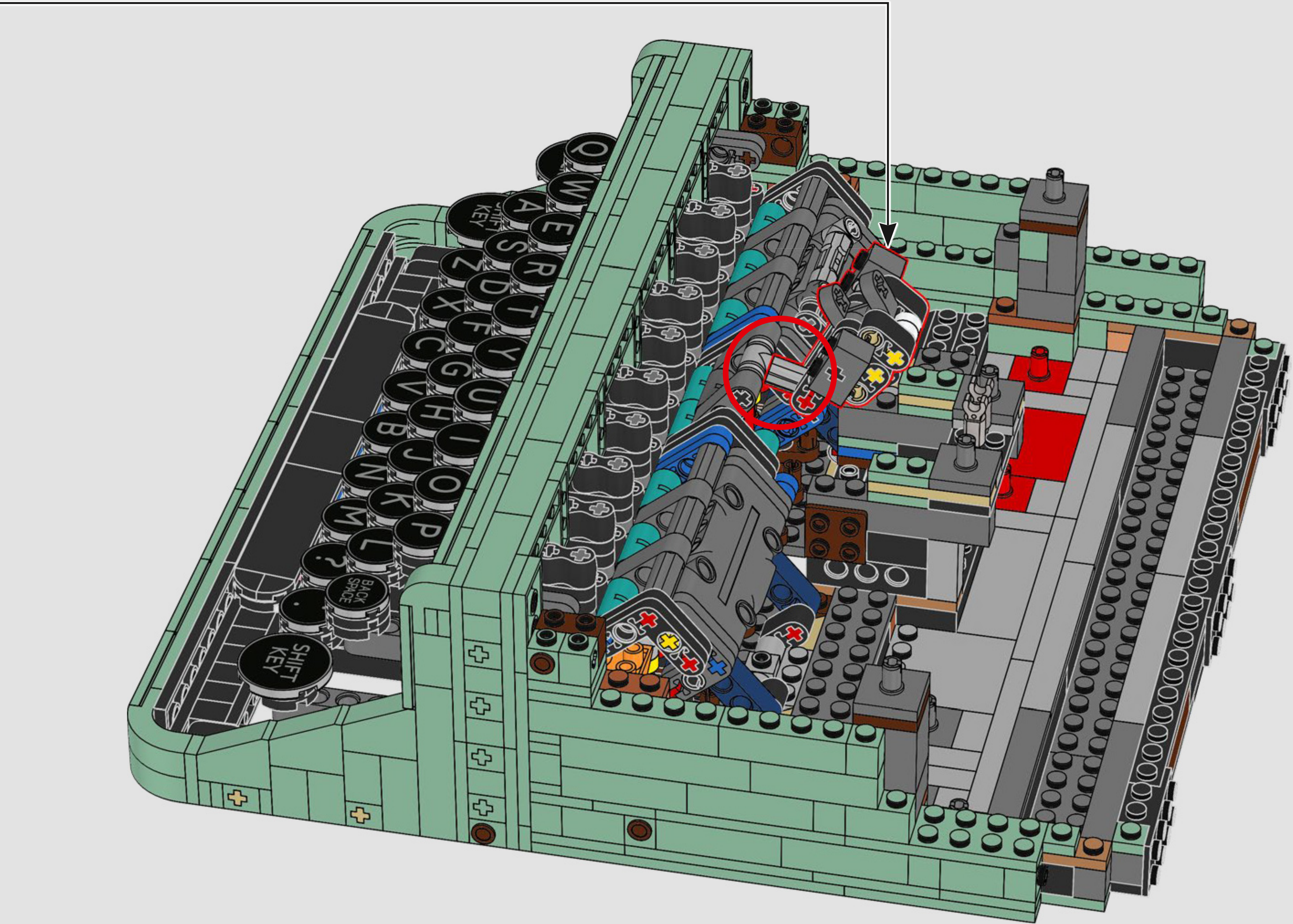
Q
W
E
R
T
Y
U
I
O
P
A
S
D
F
G
H
J
K
L
Z
X
C
V
B
N
M
?
.
SHIFT KEY
SHIFT KEY
BACK SPACE

179

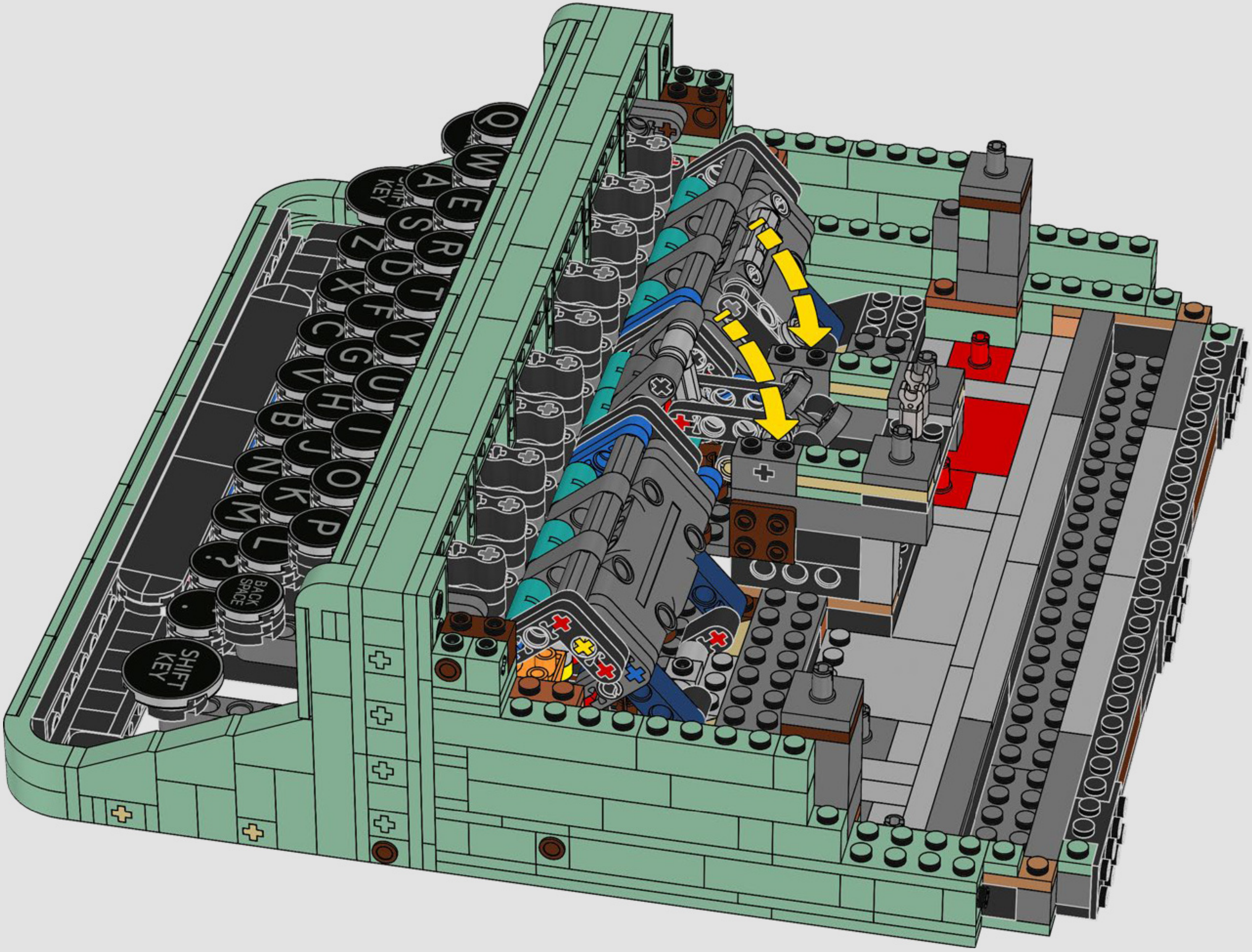
Q
W
A
SHIFT KEY
E
S
R
Z
D
T
X
F
Y
C
G
V
U
H
B
I
J
N
O
K
M
P
L
?
BACK SPACE
.
SHIFT KEY

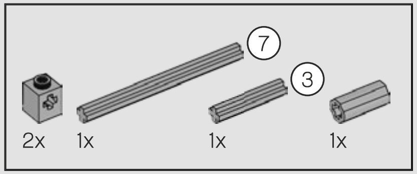
⑦
③
2x
1x
1x
1x

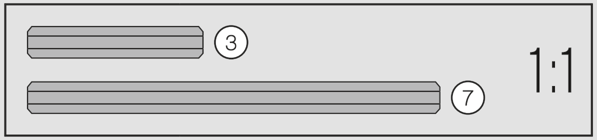

180

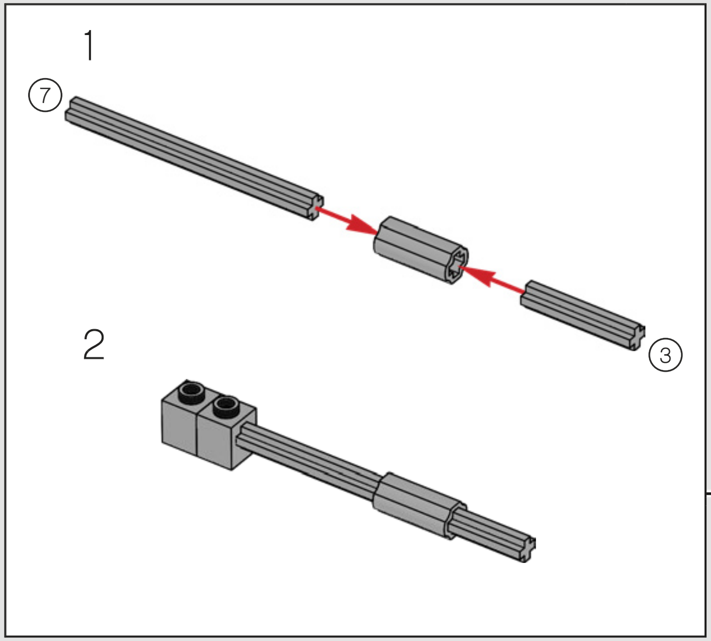

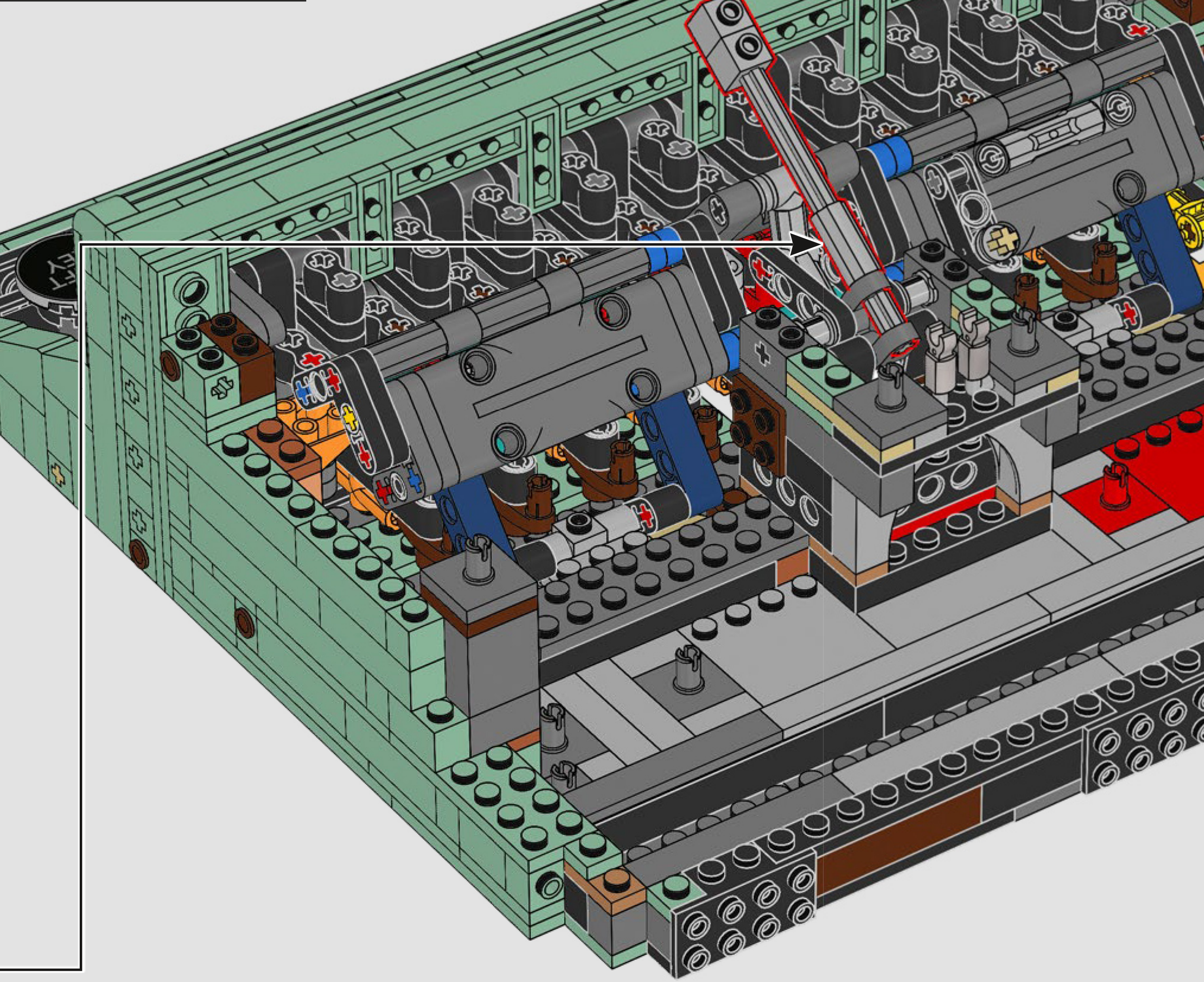

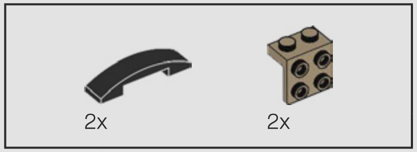

181

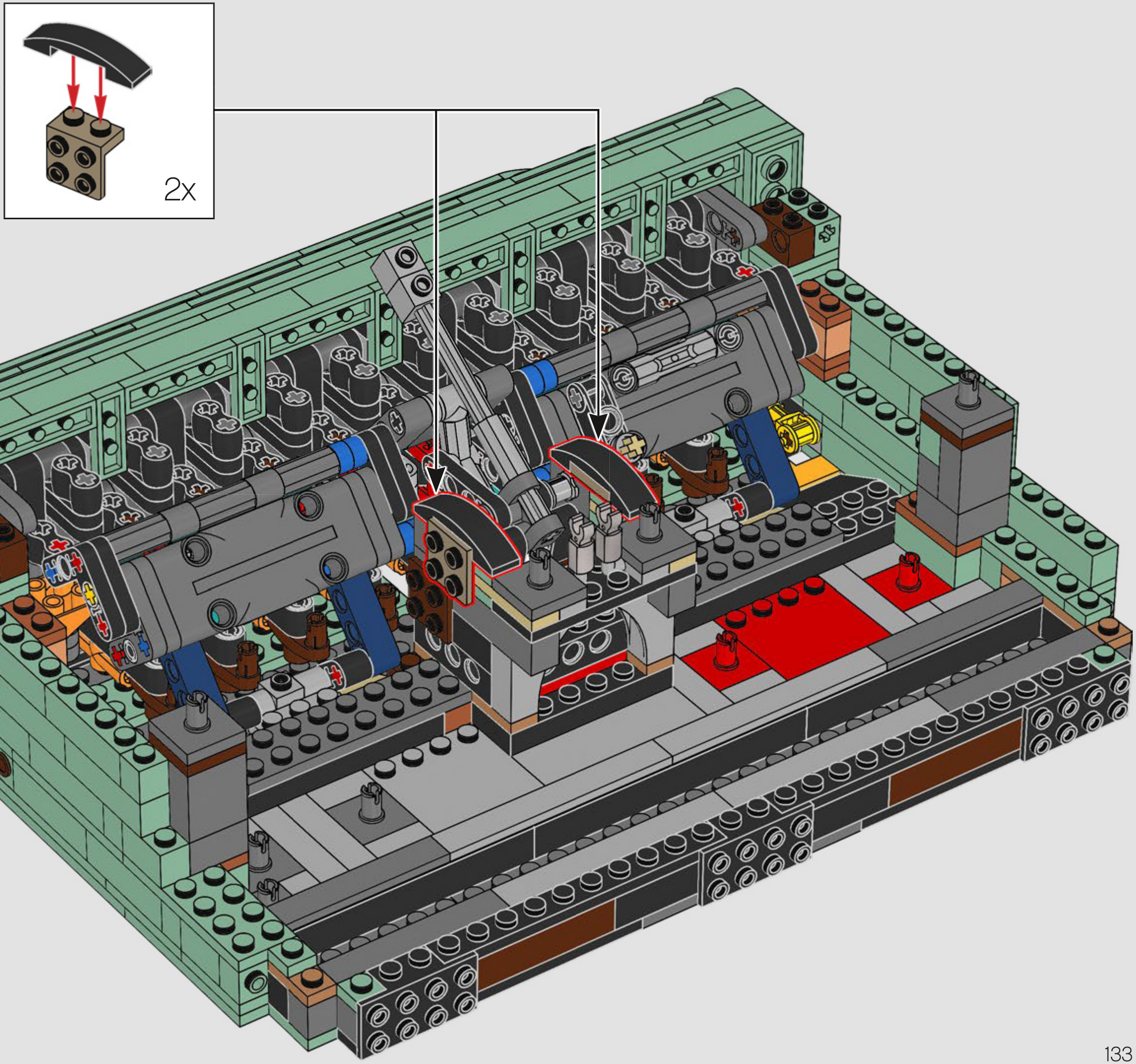

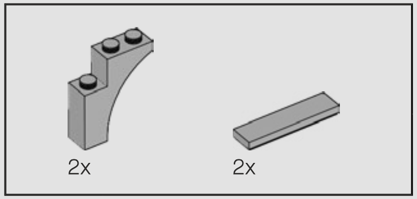

182

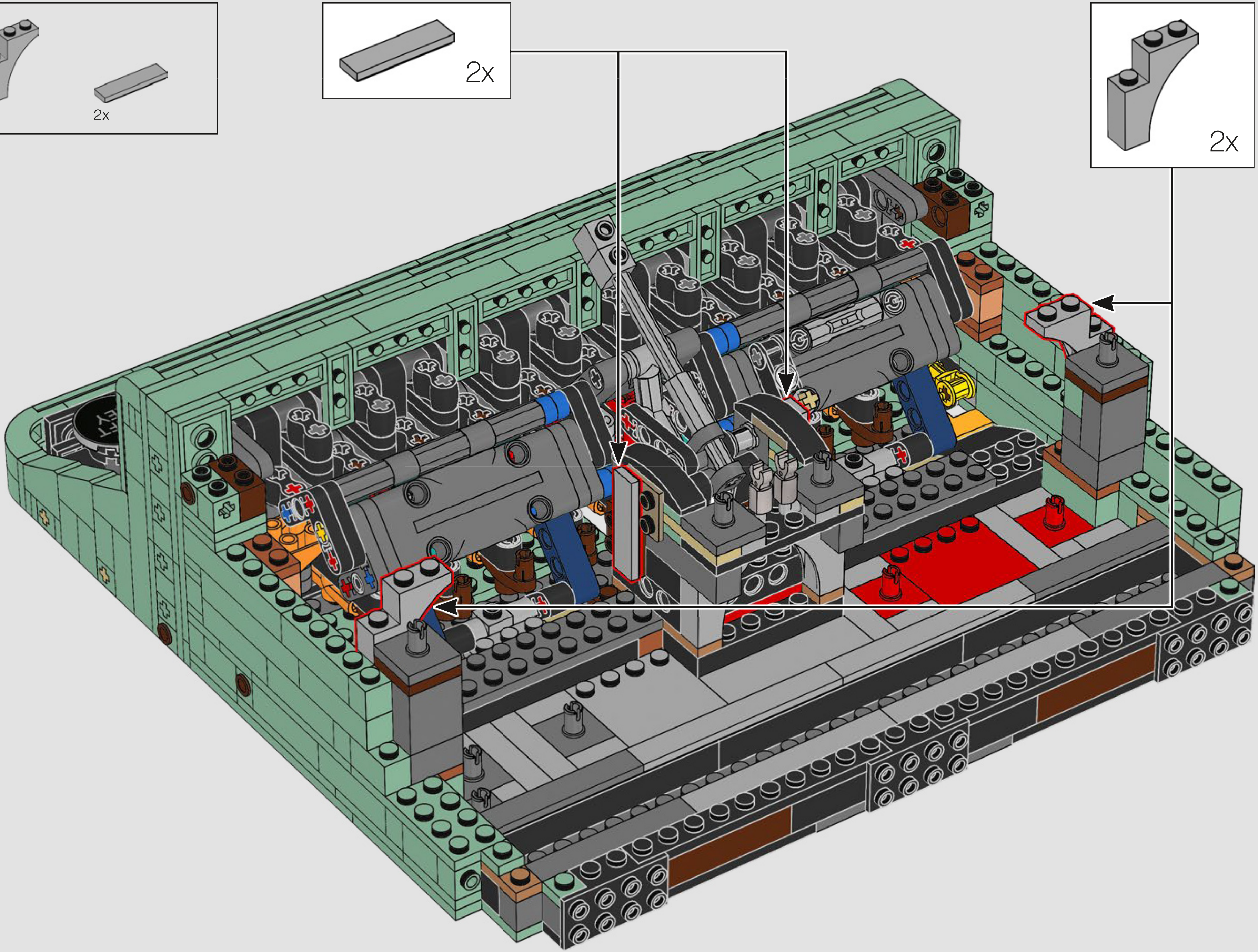

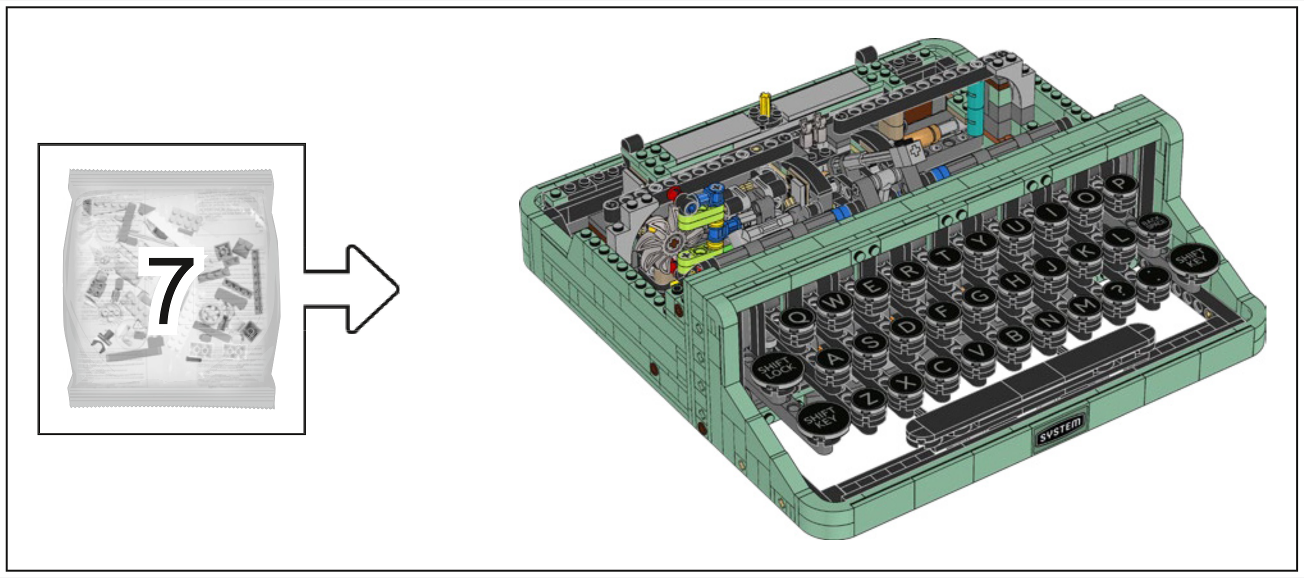

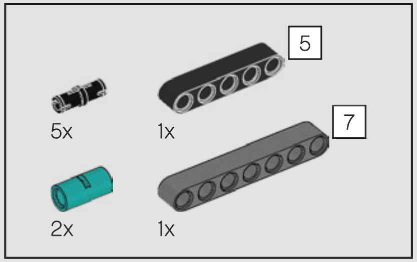
5x
1x
5
7
2x
1x

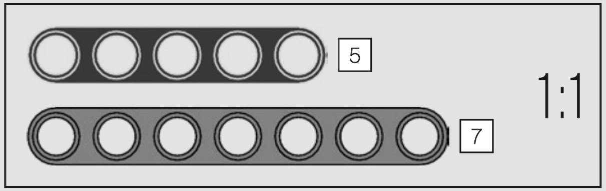

183

1

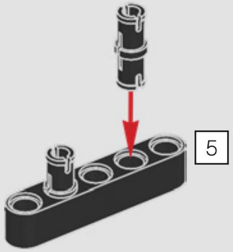

2

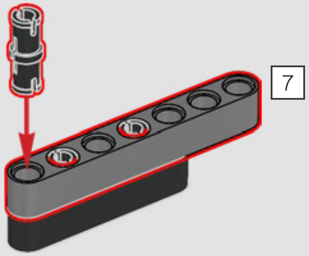

3

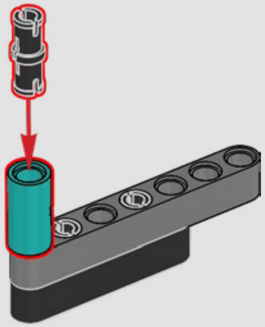

4

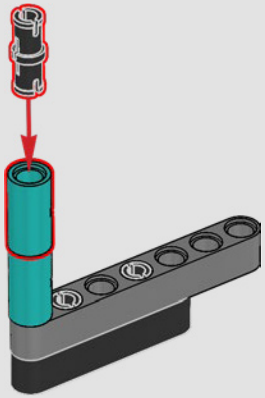

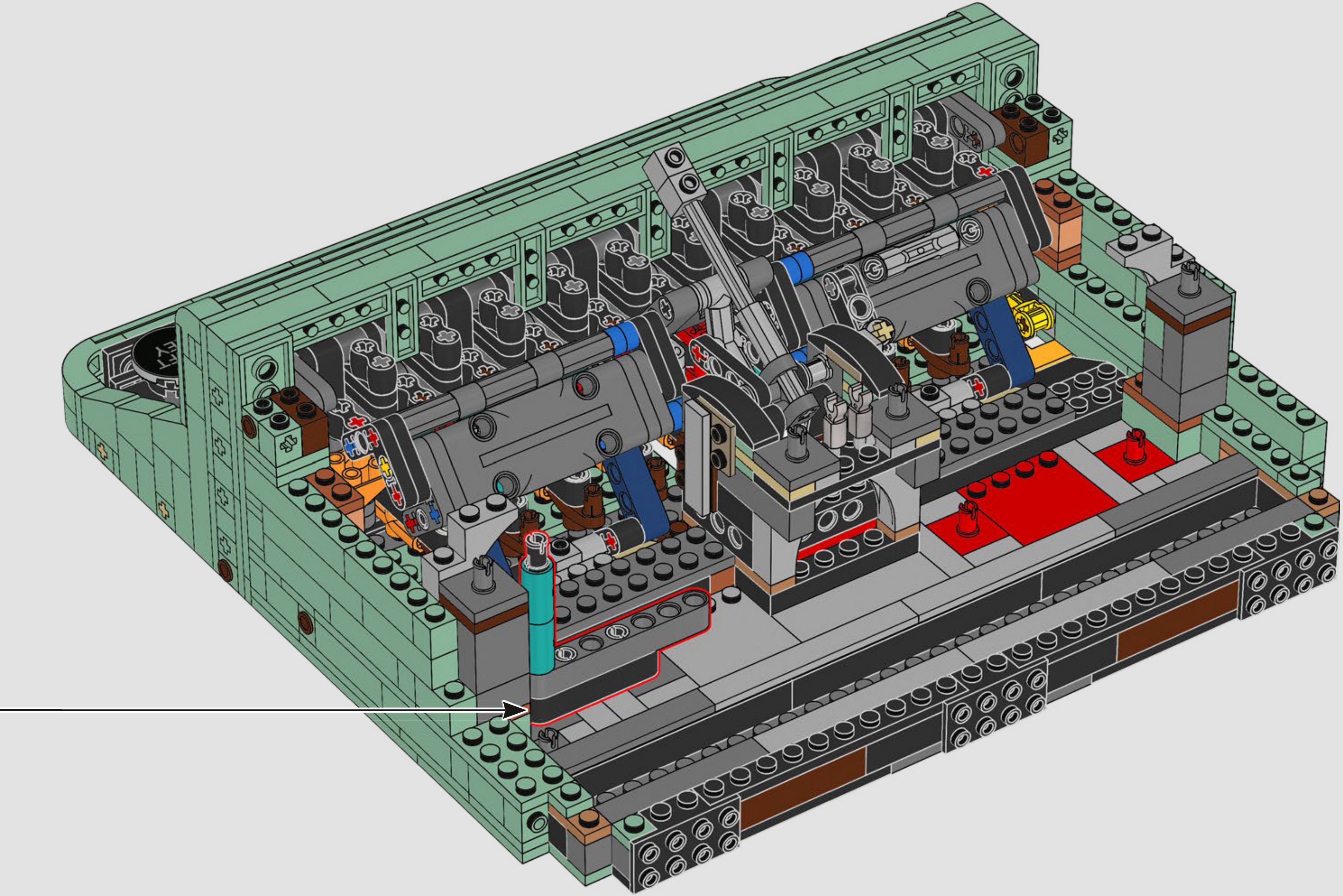

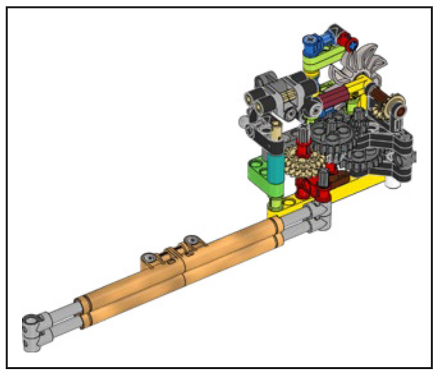

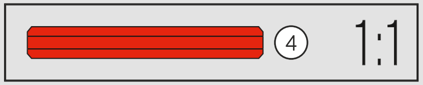

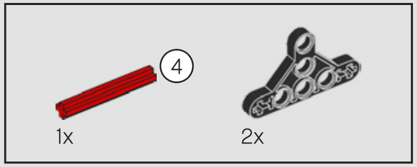

184

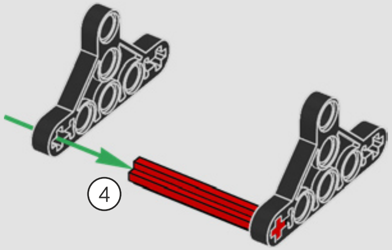

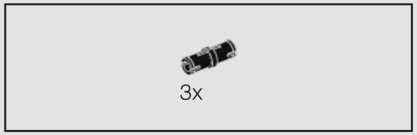

185

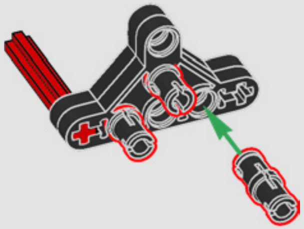

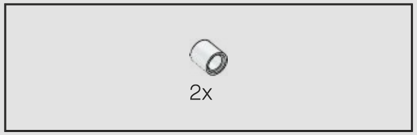

186

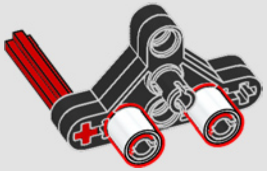

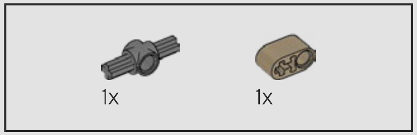

187

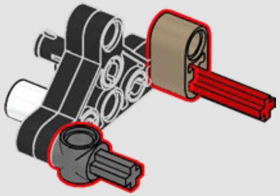

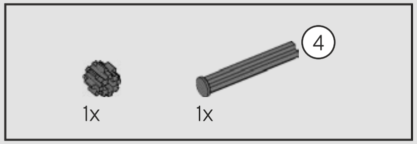

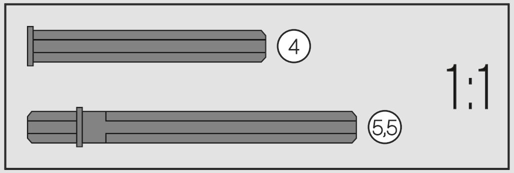

188

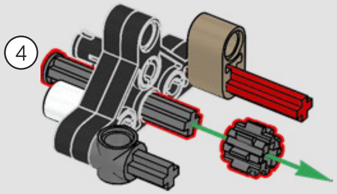

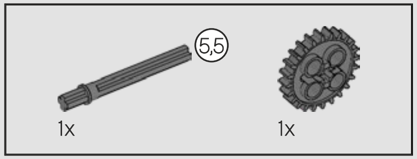

189

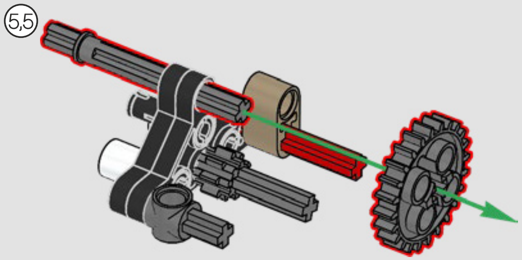

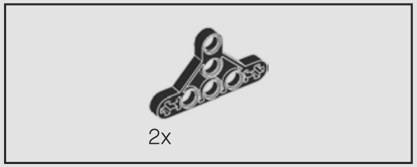

190

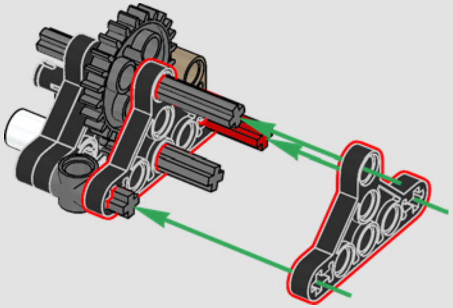

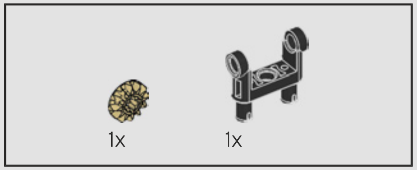

191

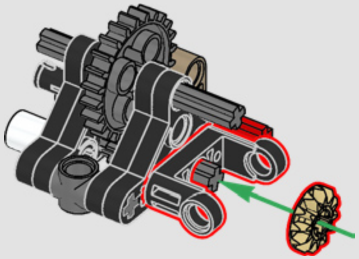

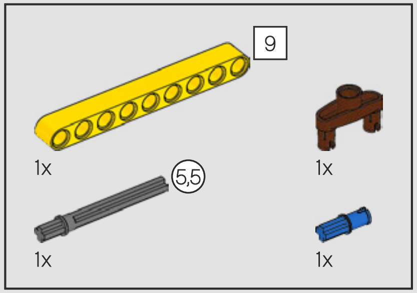
9
1x
5,5
1x
1x
1x

192

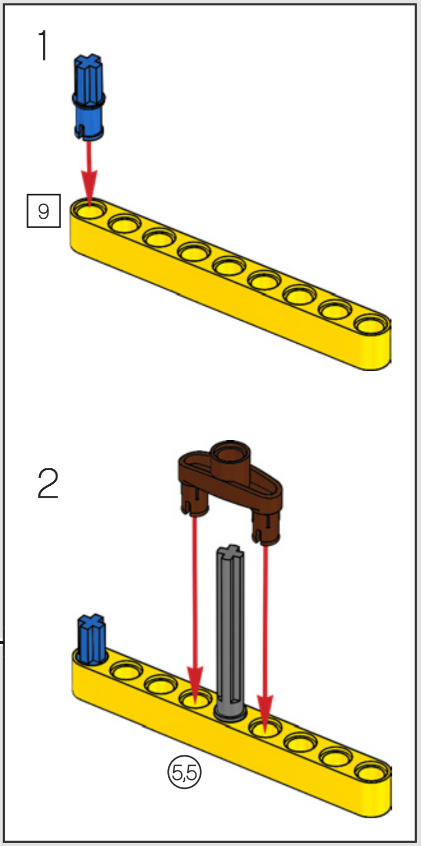

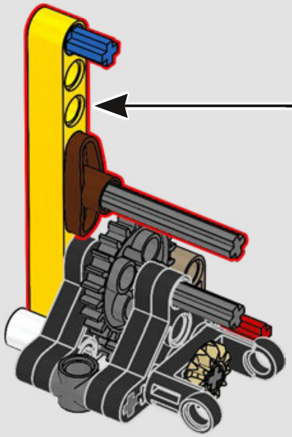

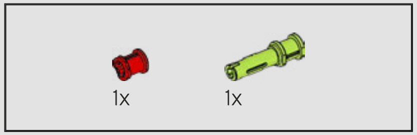

193

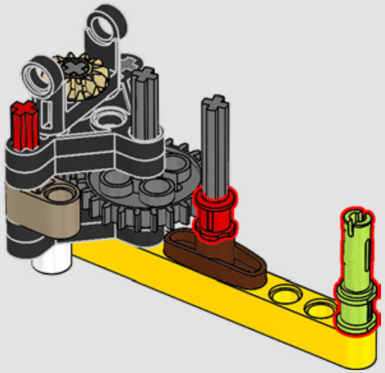

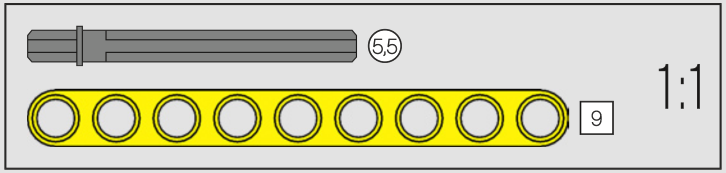

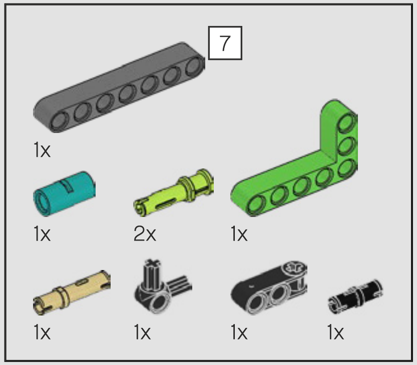
7
1x
1x
2x
1x
1x
1x
1x
1x

194

1

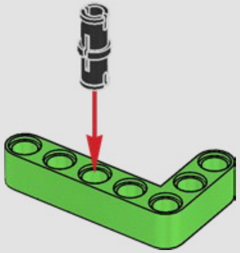

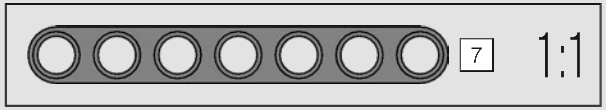

2

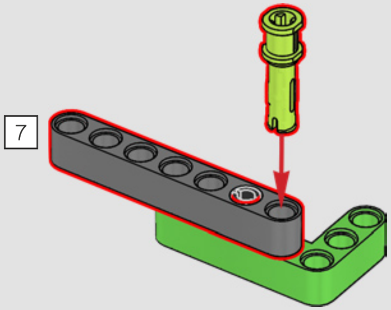

3

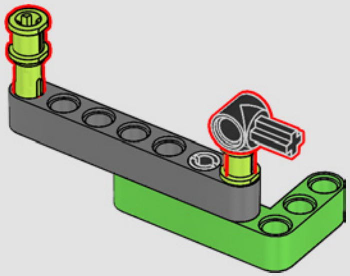

4

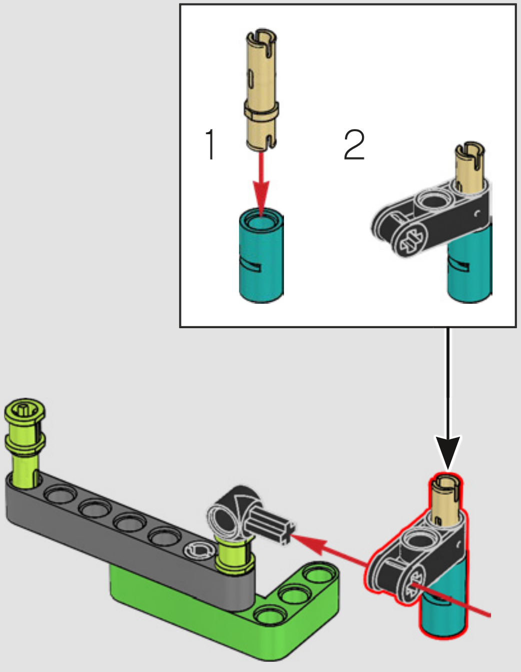

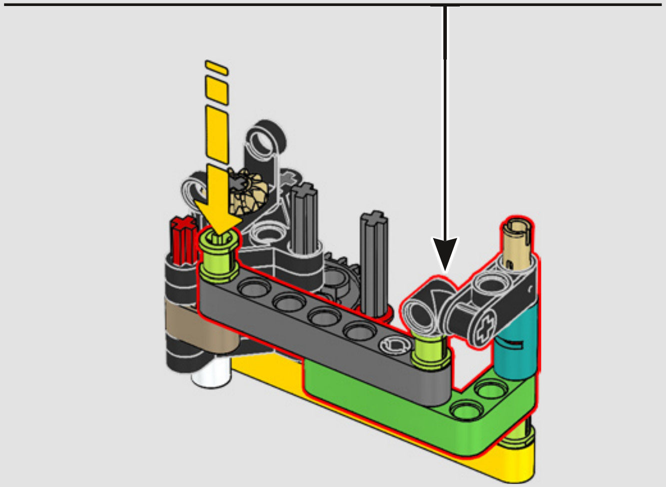

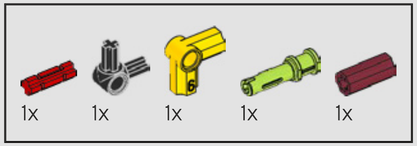
1x
1x
1x
1x
1x

195

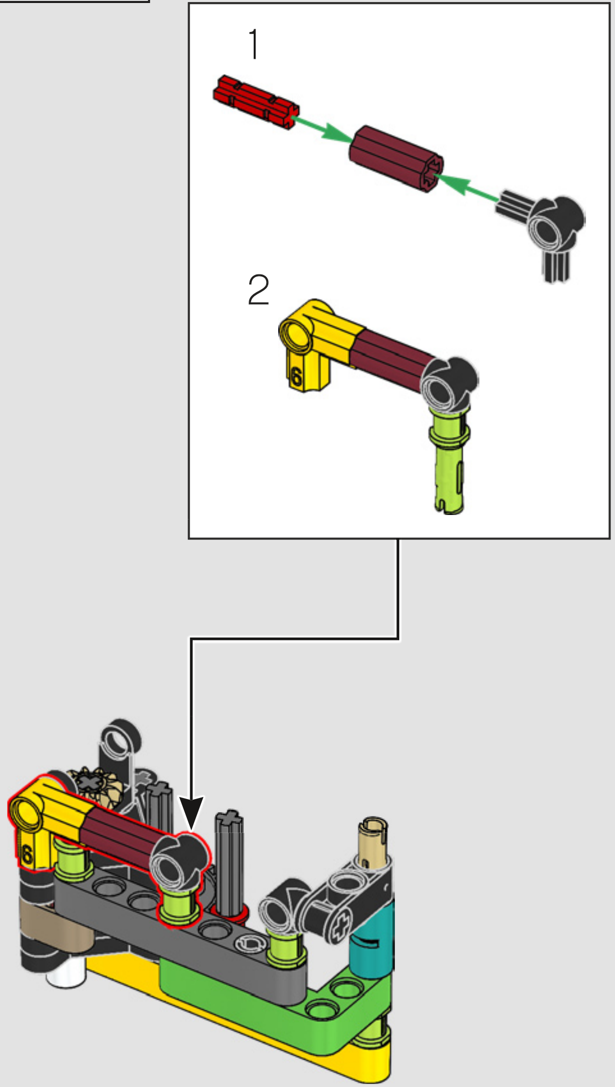

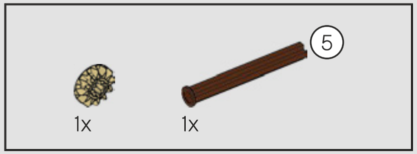

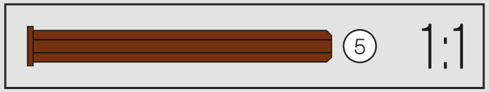

196

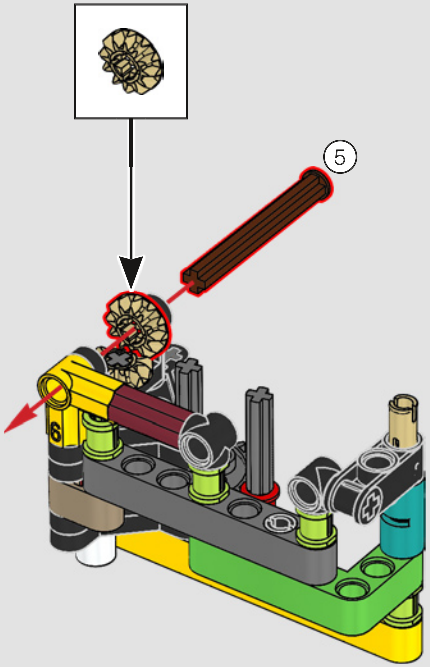

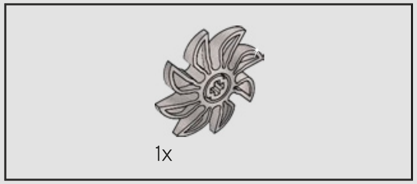

197

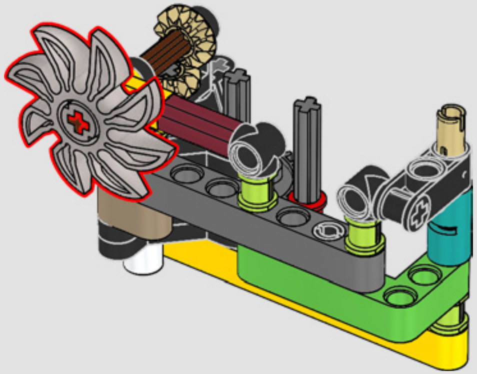

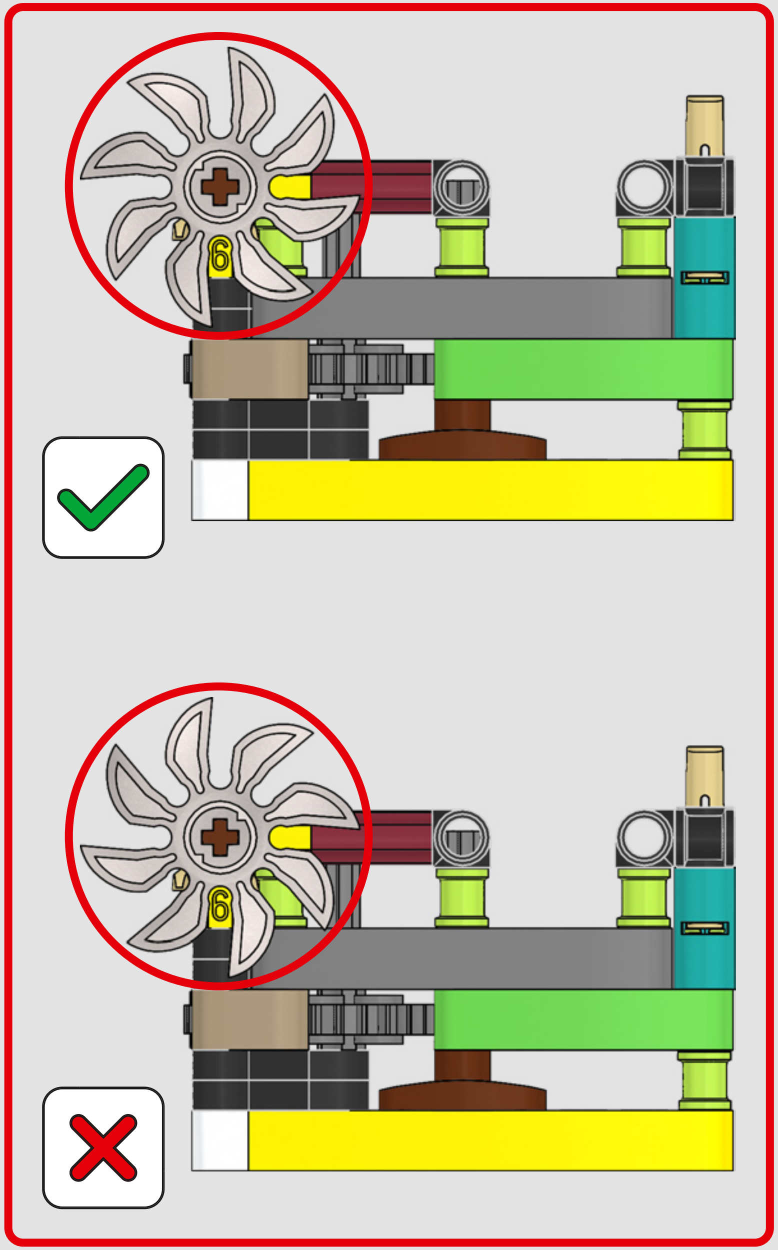

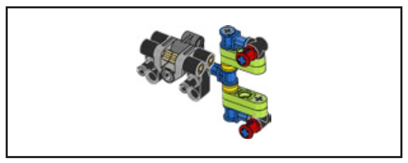

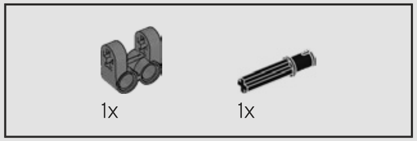

198

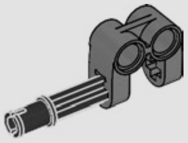

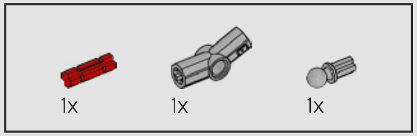

199

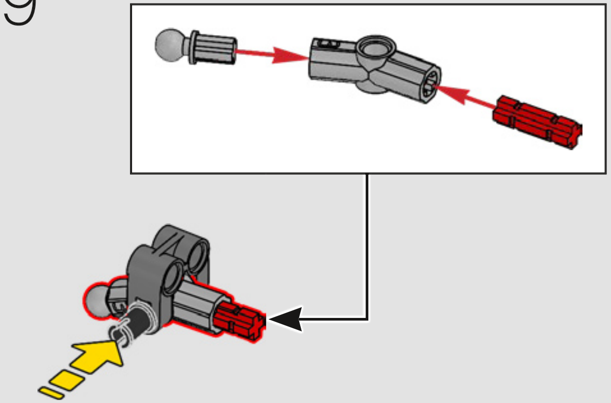

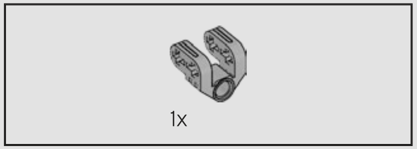

200

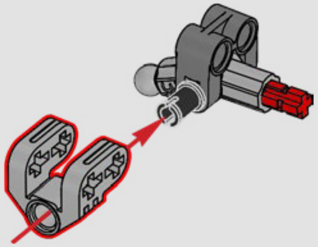

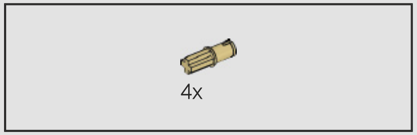

201

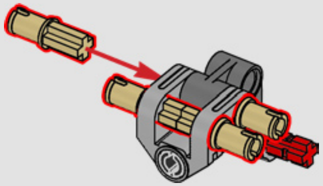

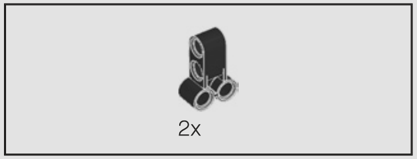

202

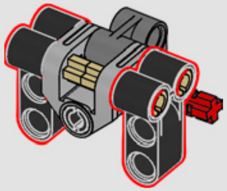

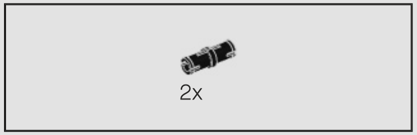

203

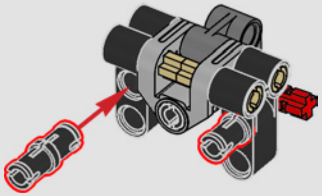

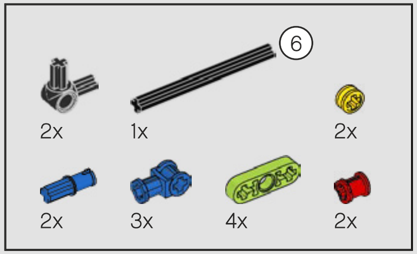
6
2x
1x
2x
2x
3x
4x
2x

204

1

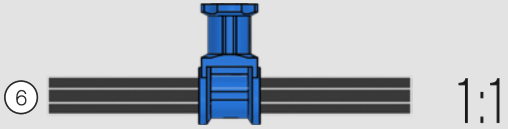

2

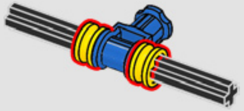

3

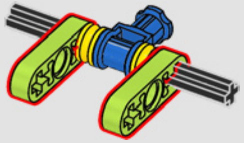

4

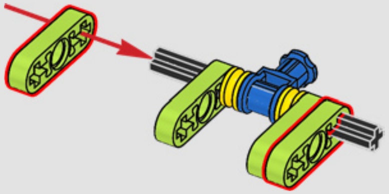

5

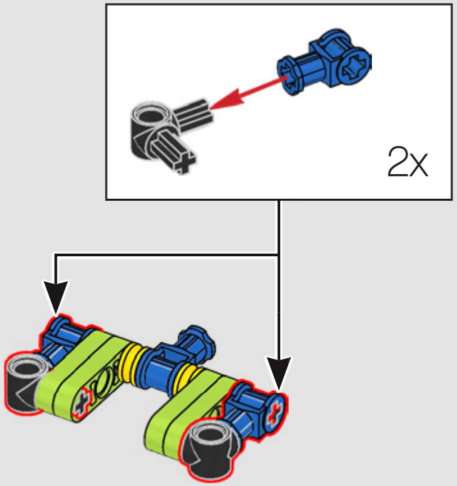

6

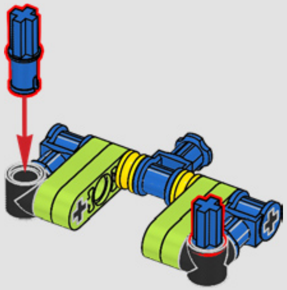

7

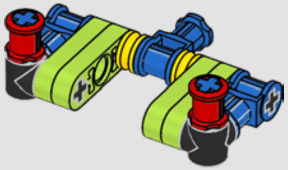

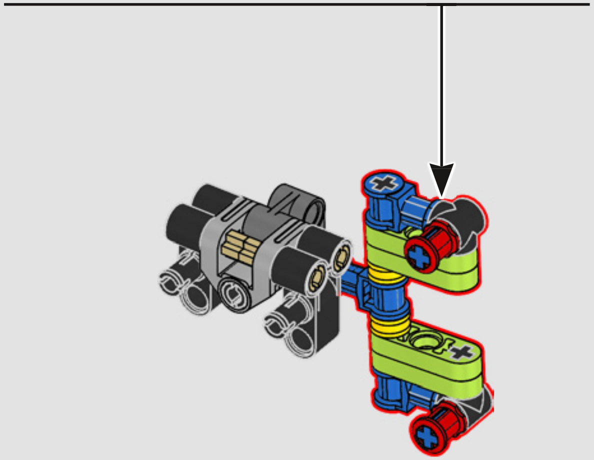

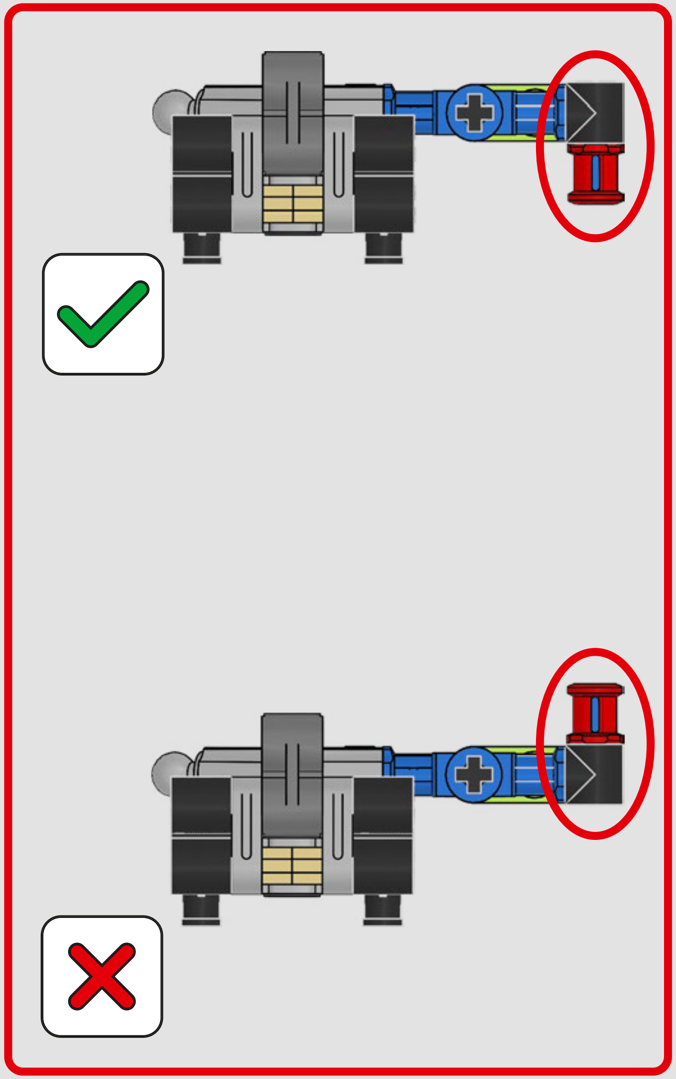

205

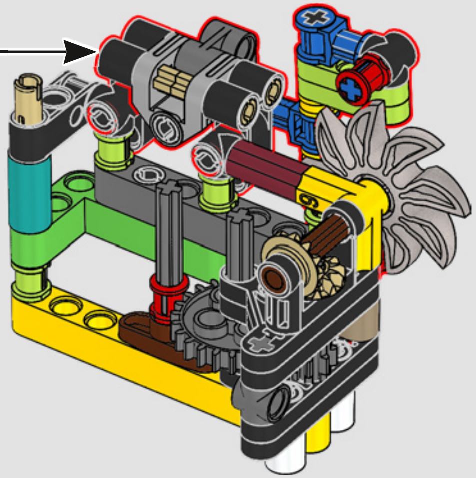

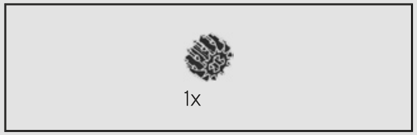

206

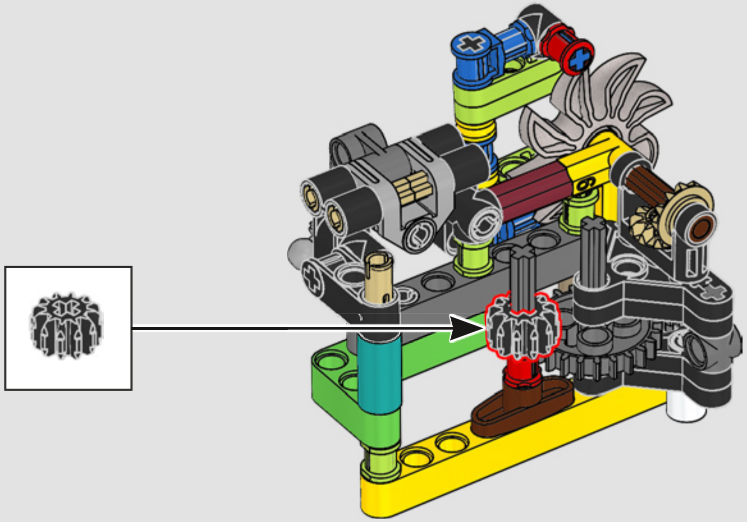

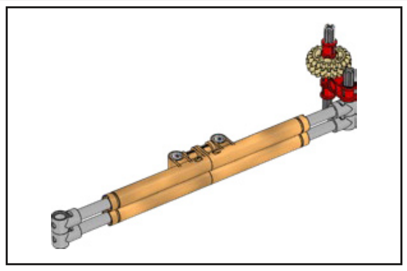

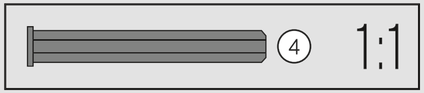

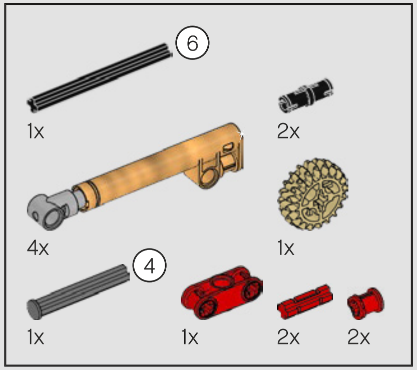
6
1x
2x
4x
1x
4
1x
1x
2x
2x

207

1

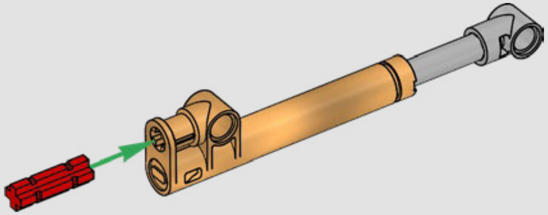

2

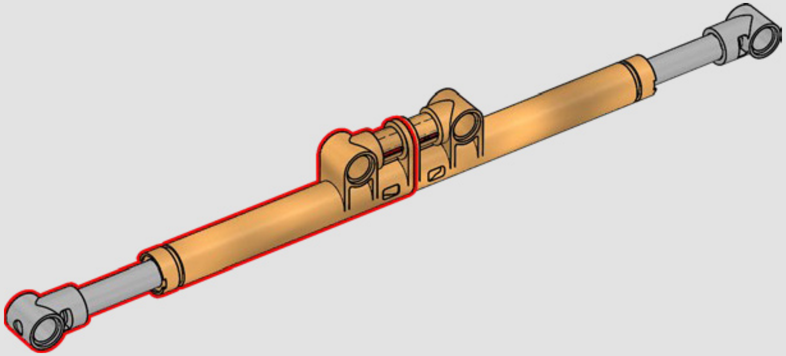

3

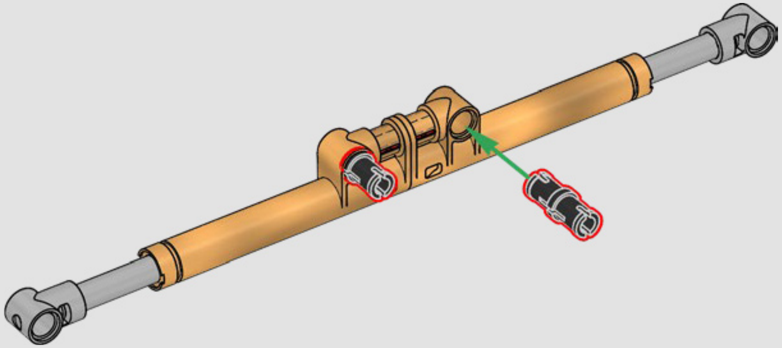

4

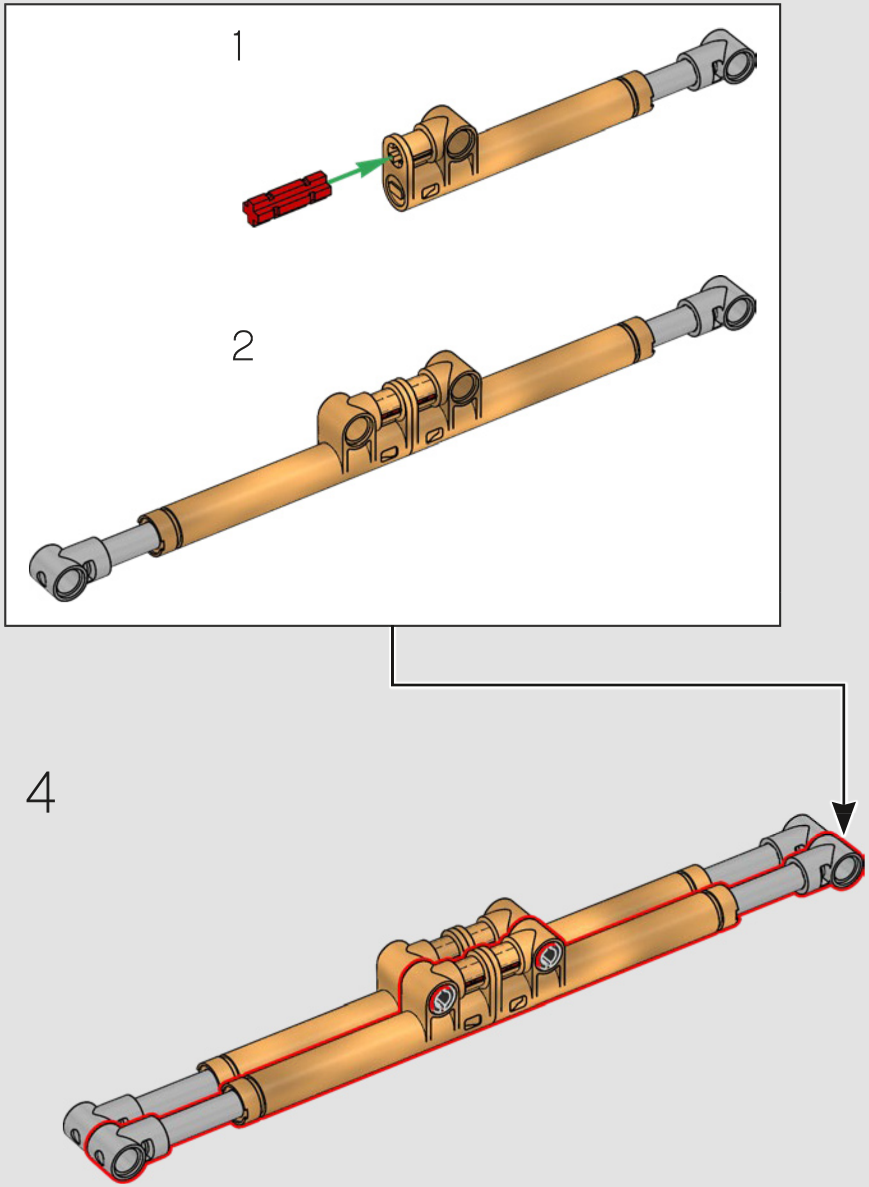

5

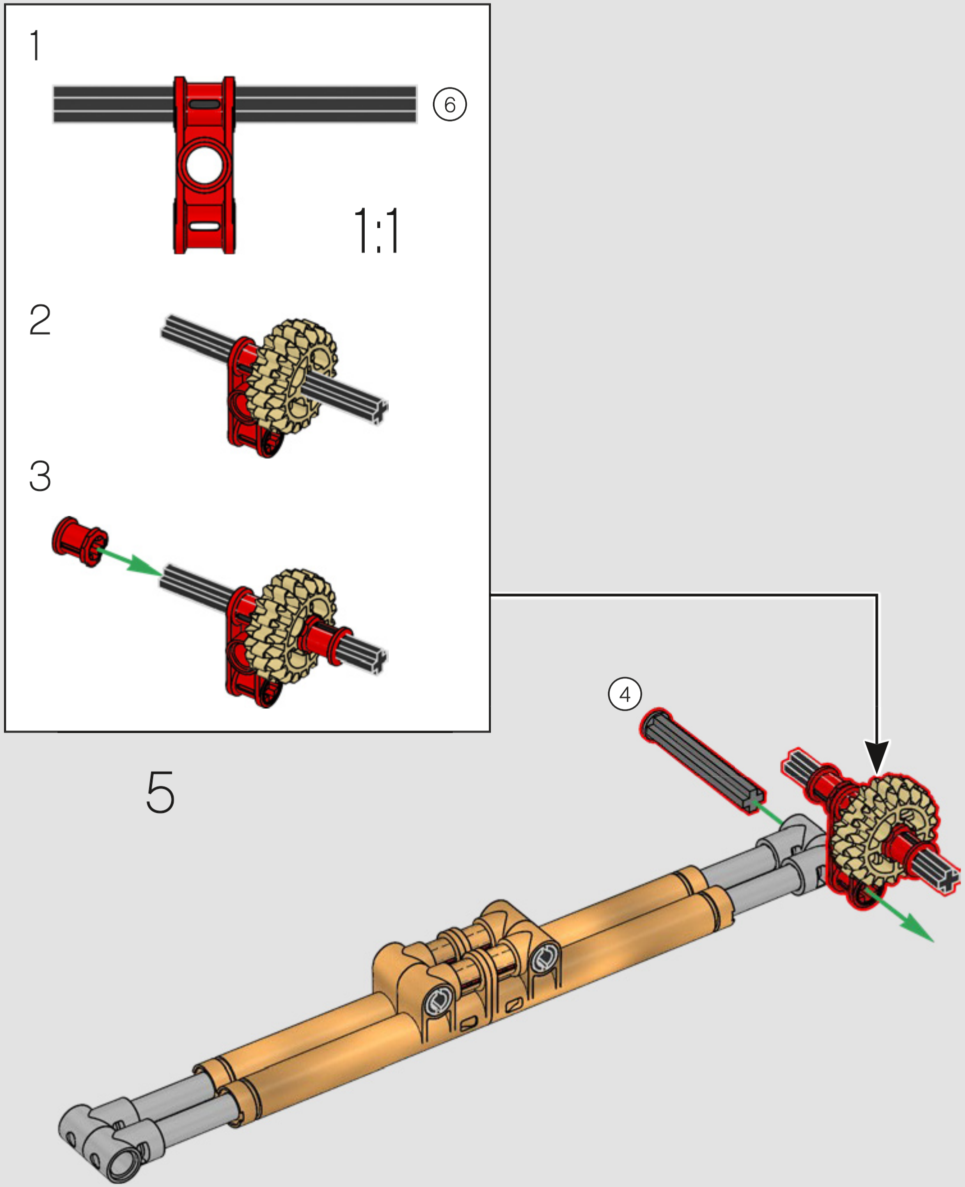

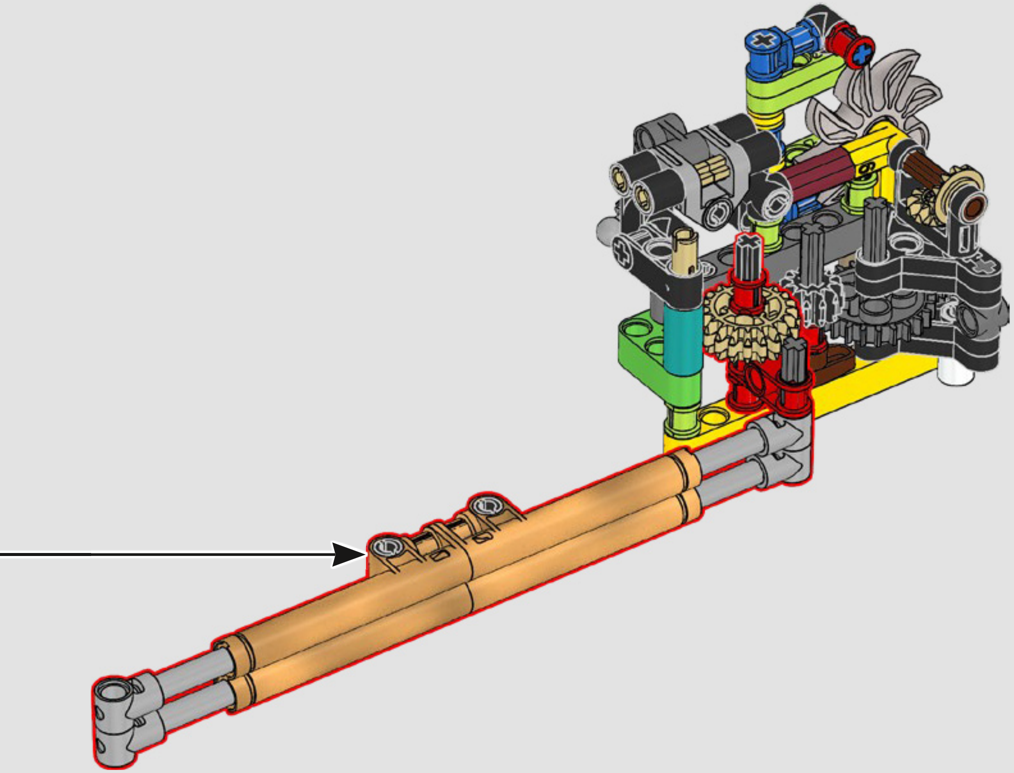

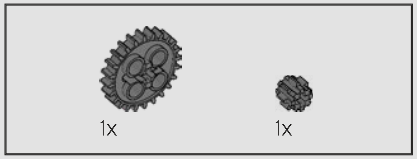

208

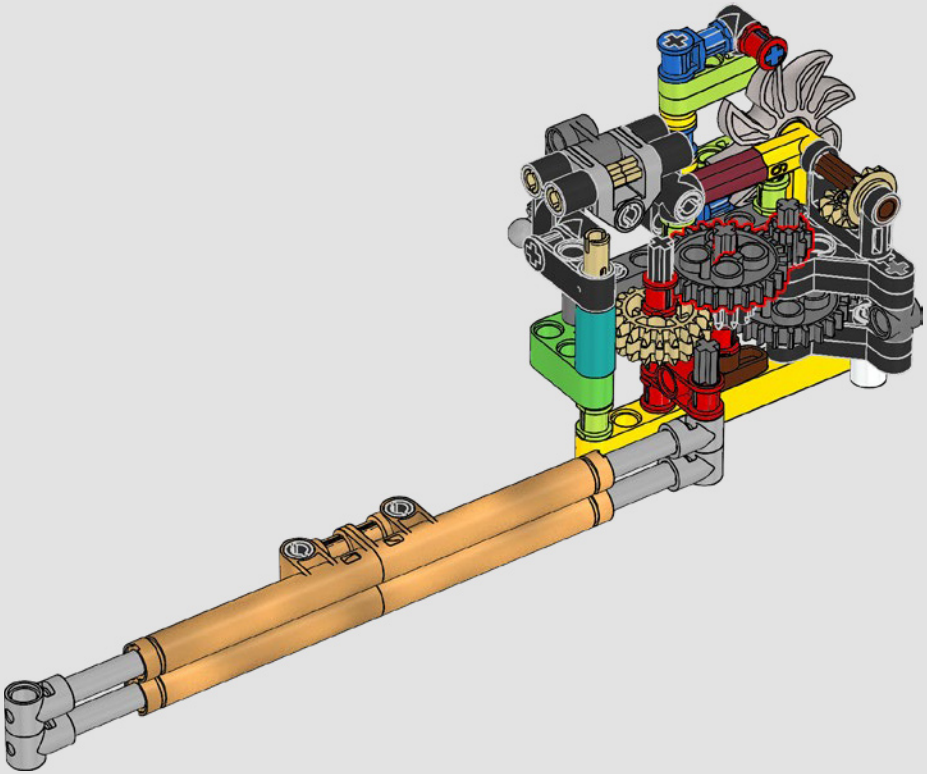

209

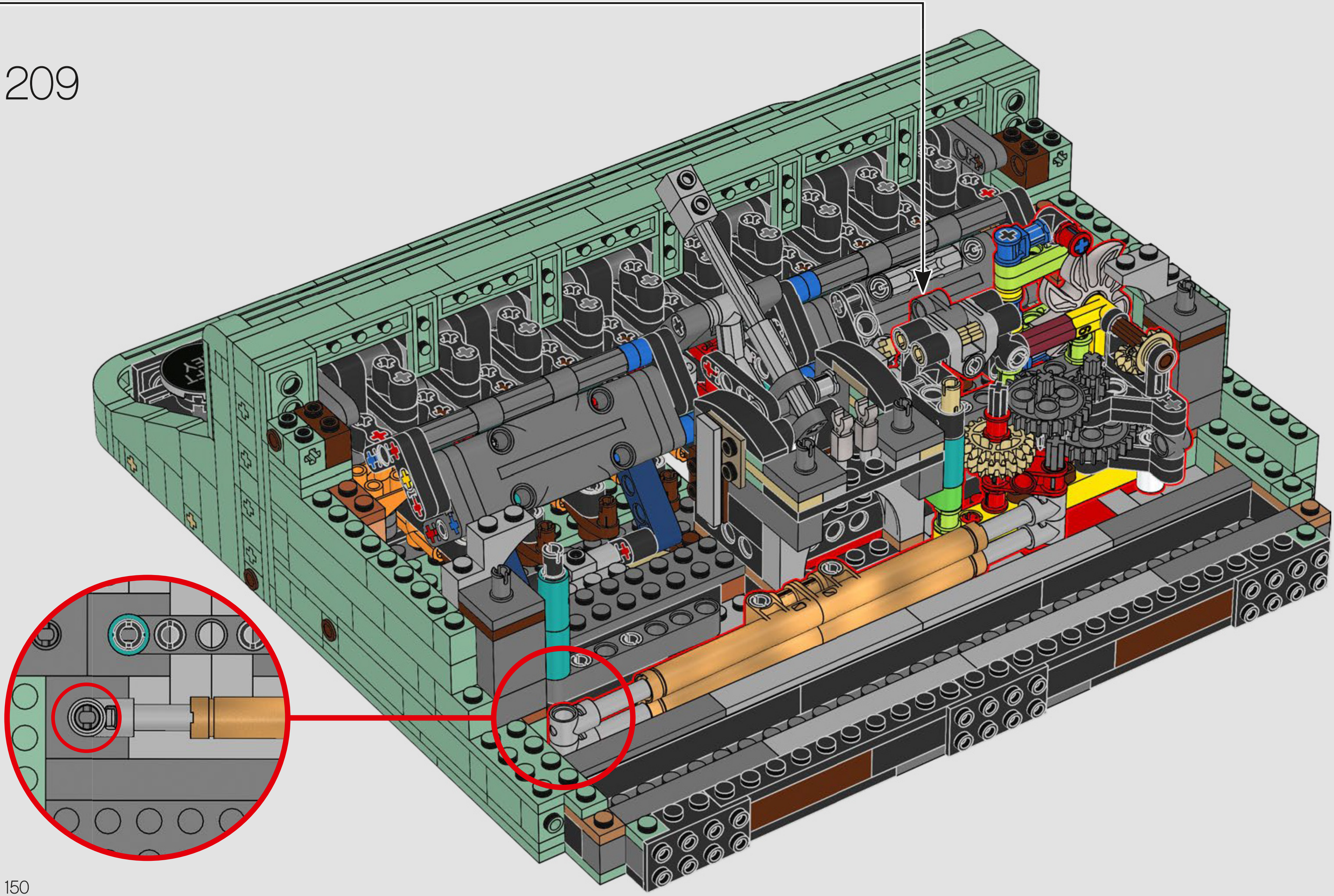

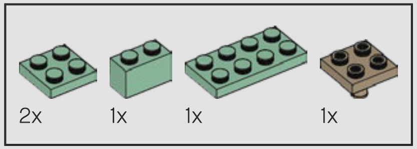

210

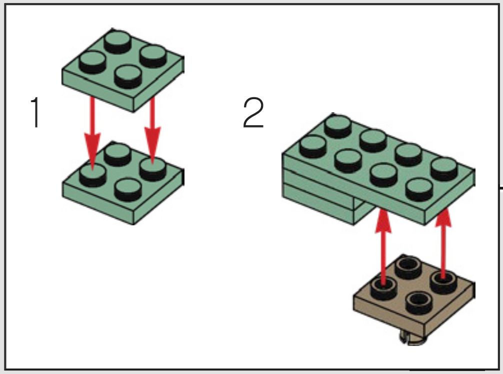

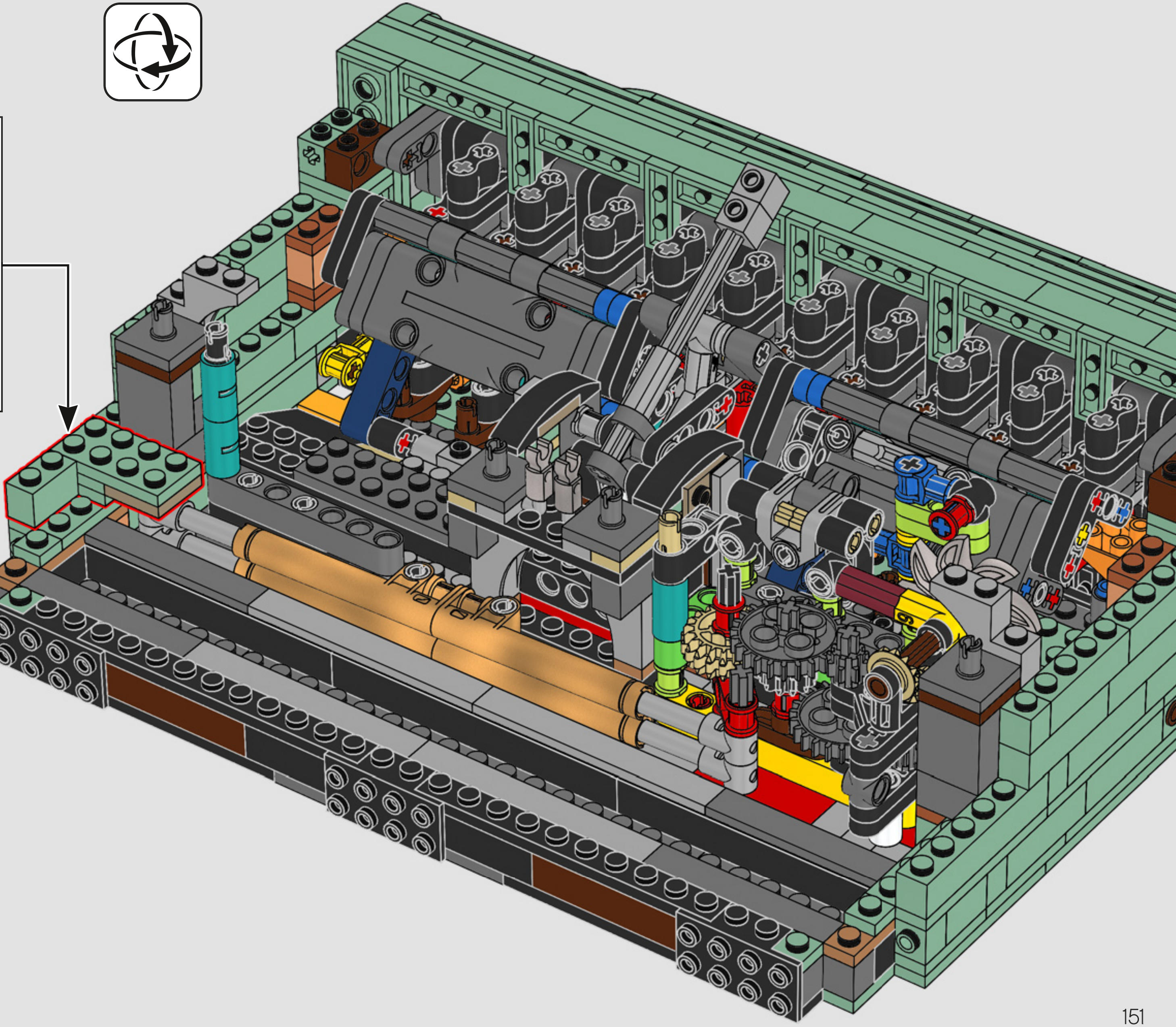

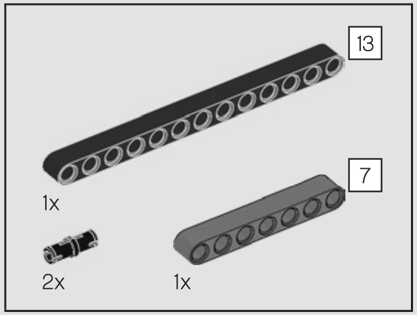

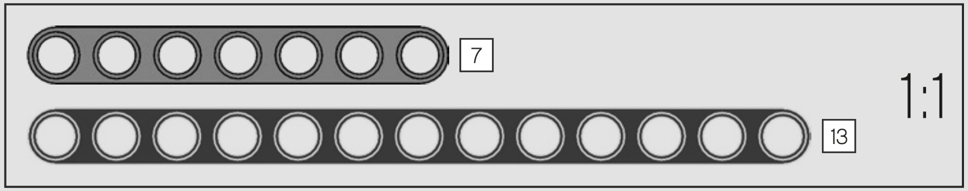

211

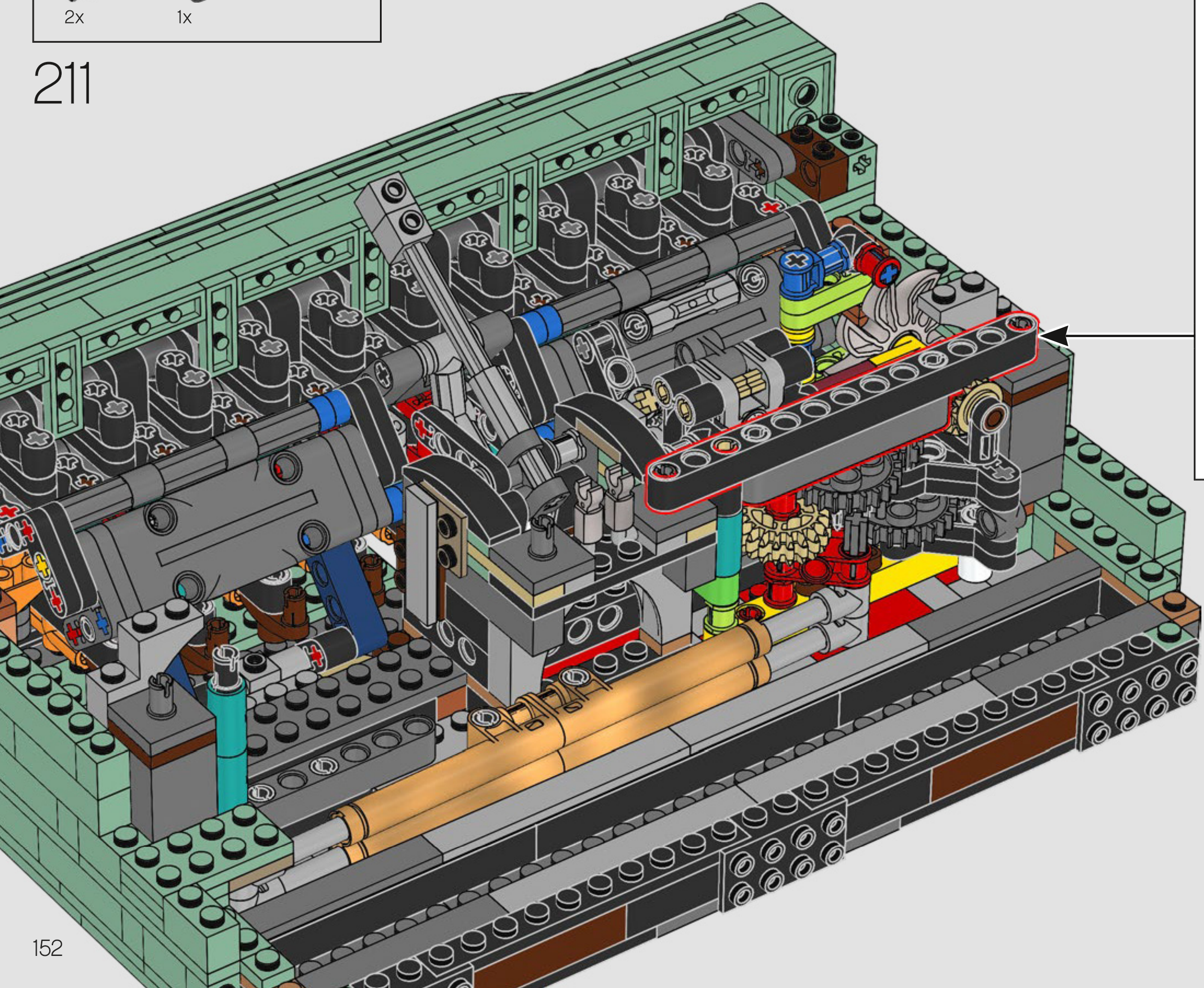

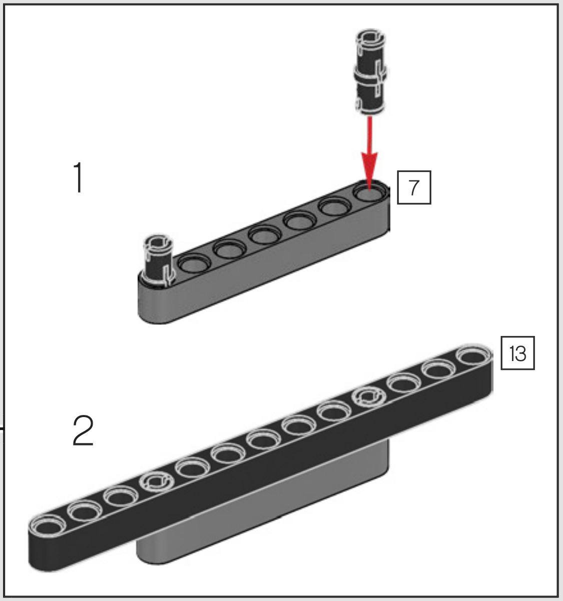

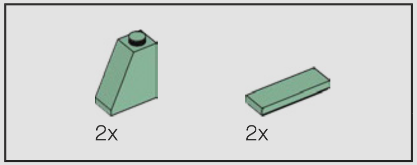

212

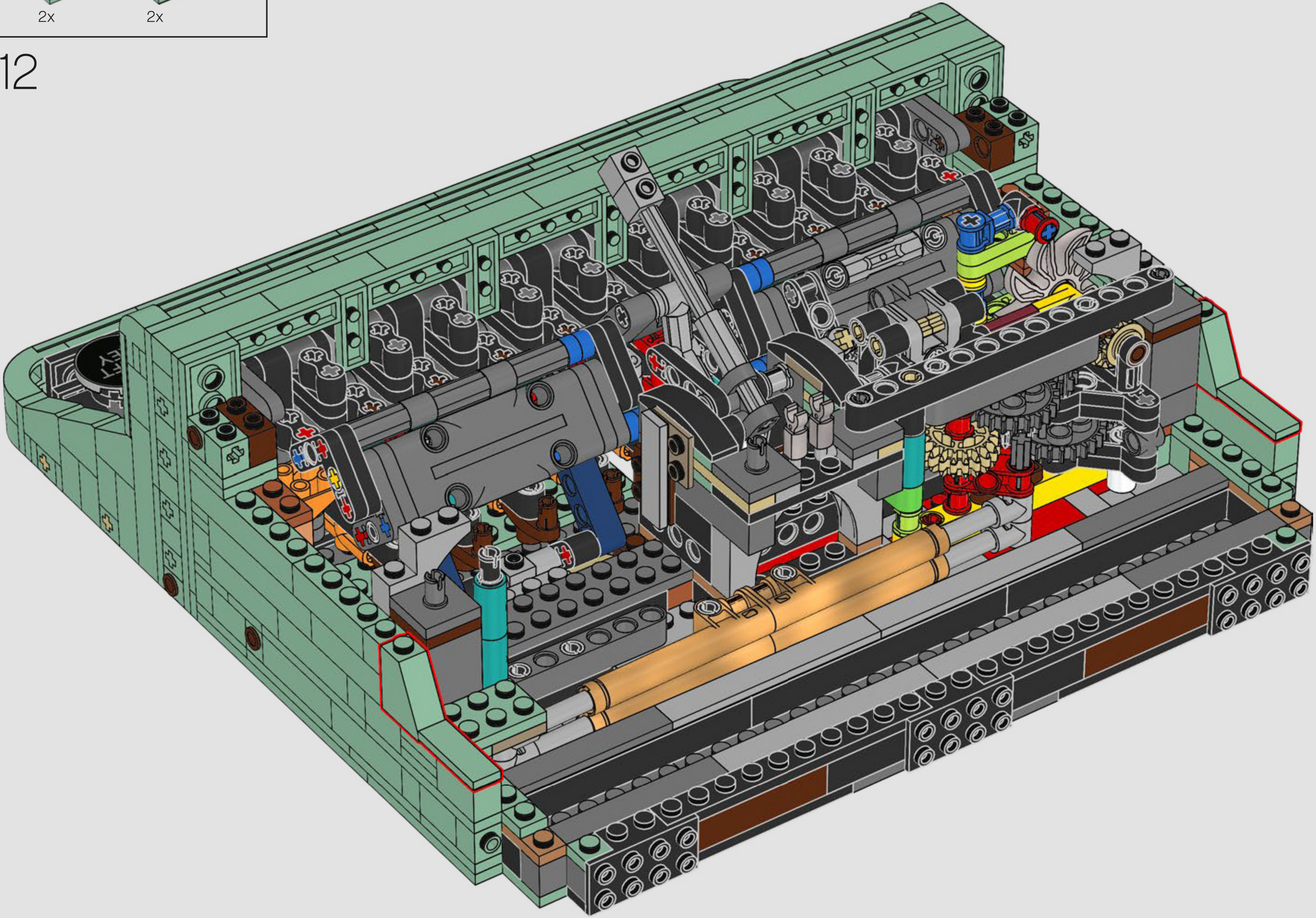

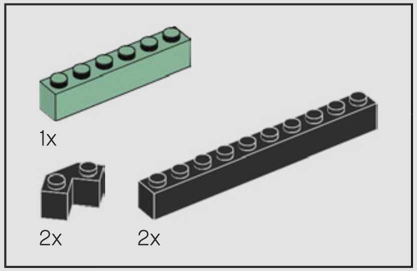

213

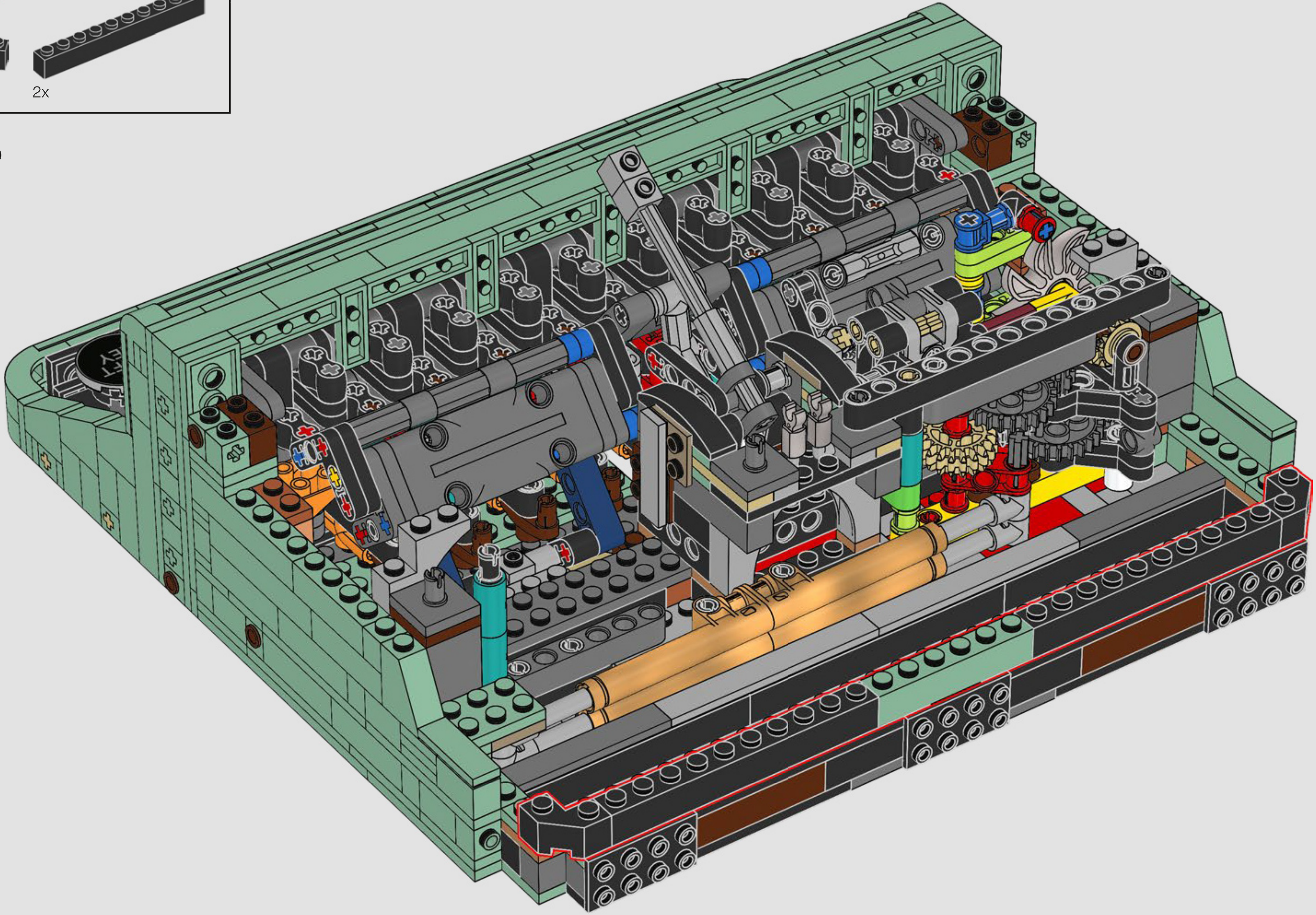

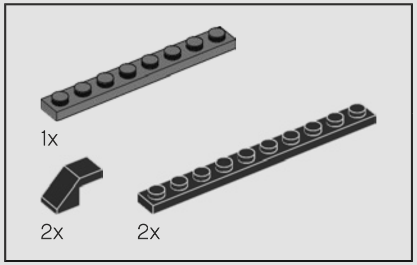

214

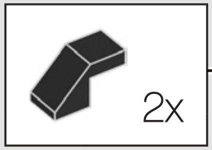

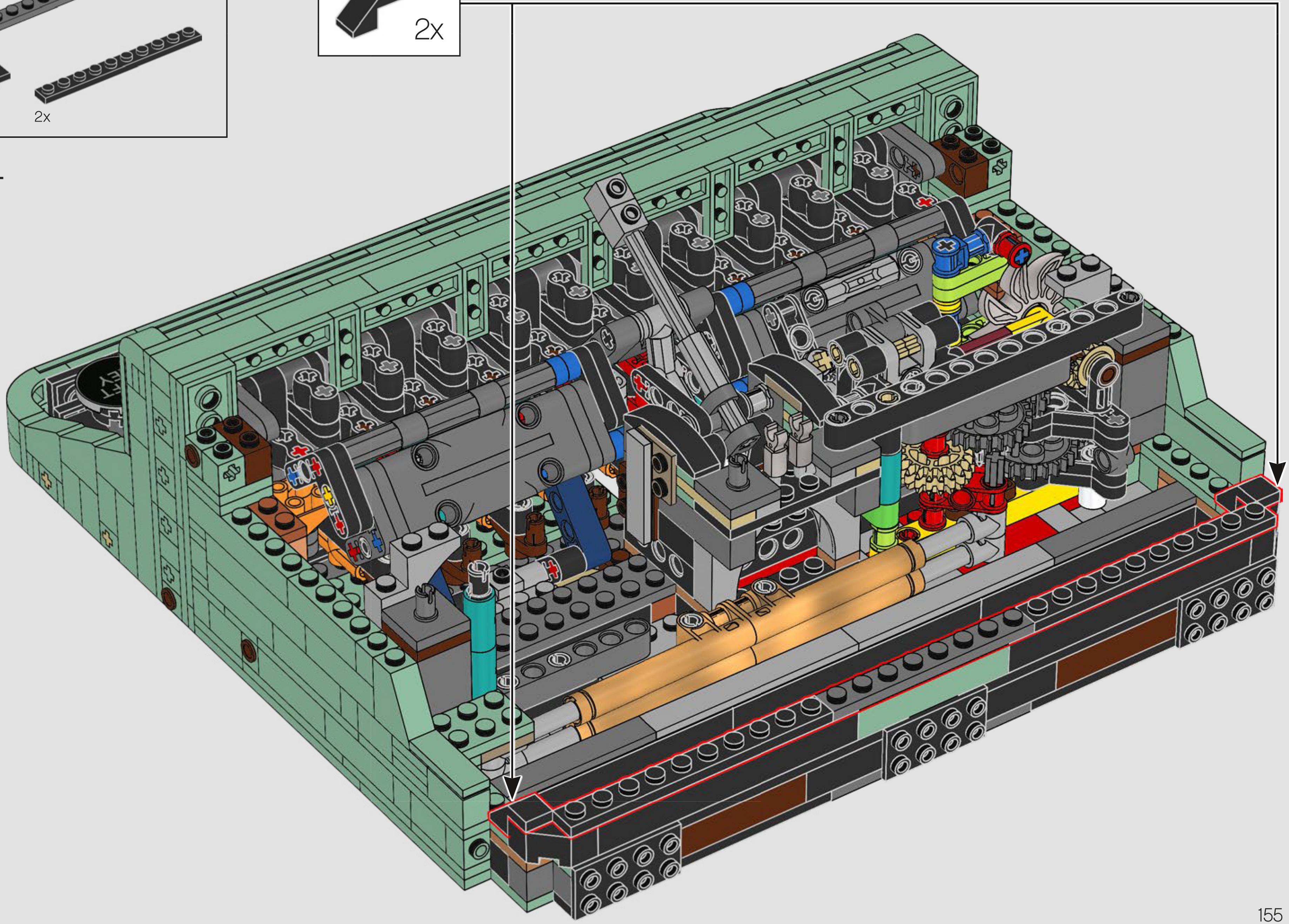

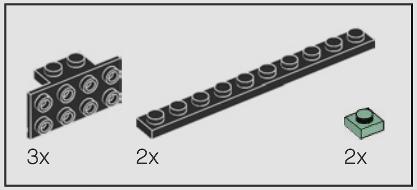

215

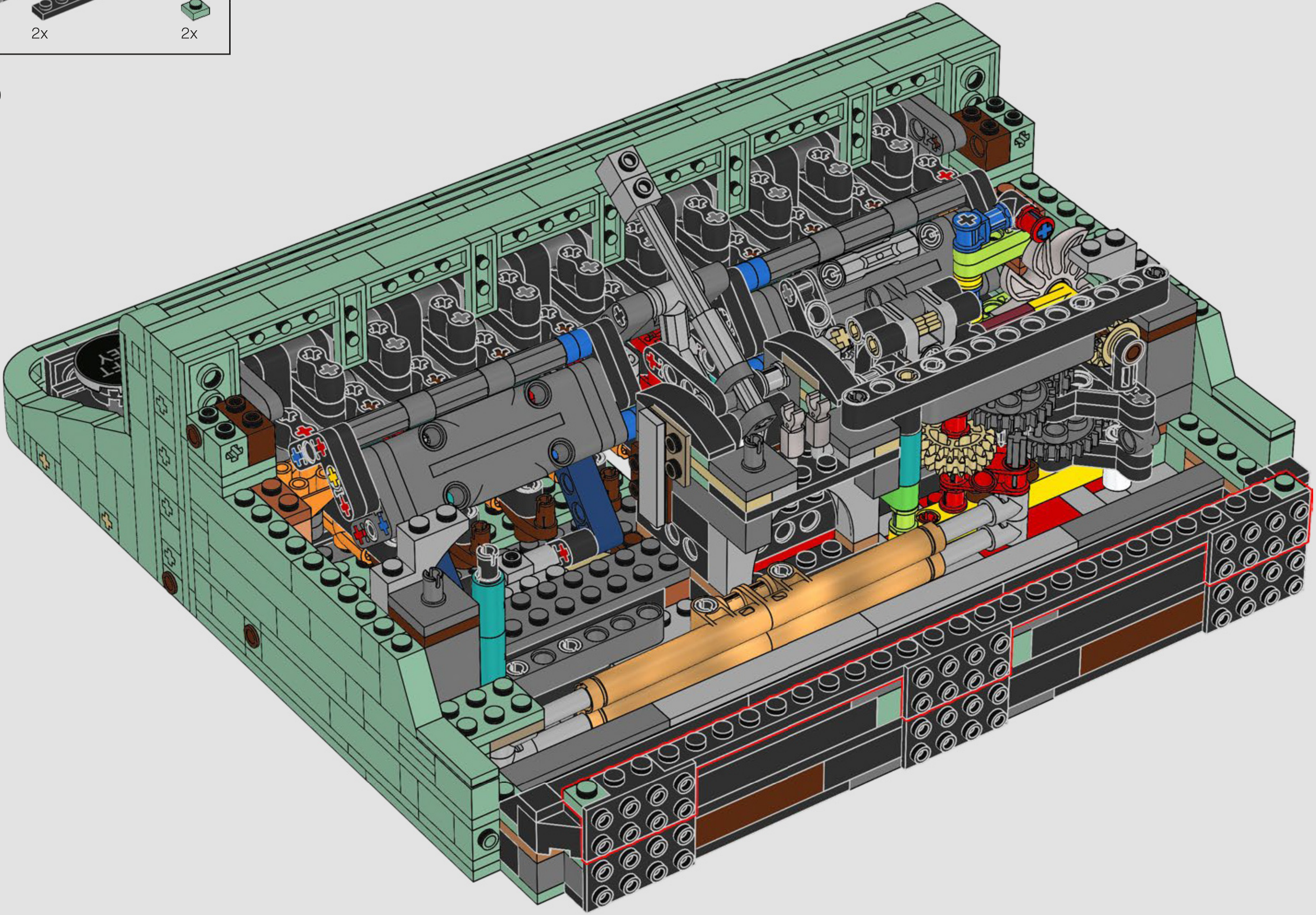

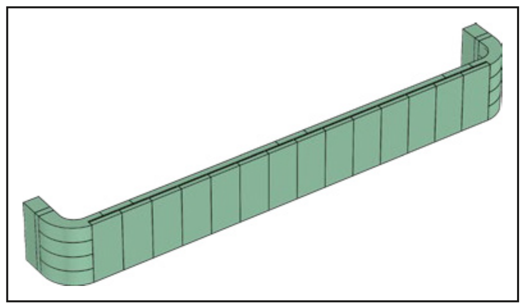

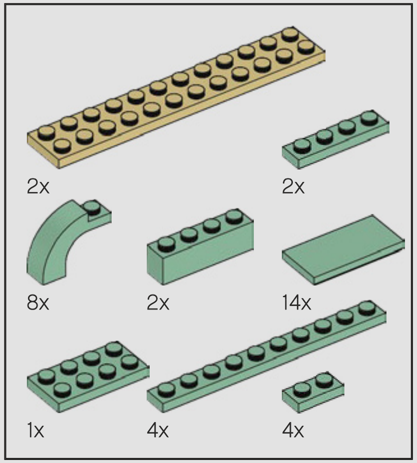
2x
2x
8x
2x
14x
1x
4x
4x

216

1

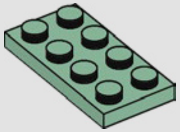

2

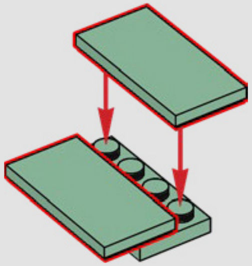

3

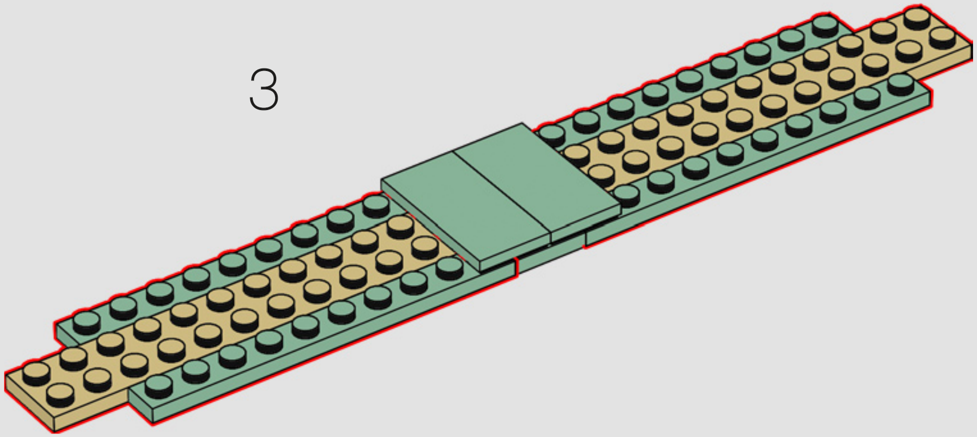

4

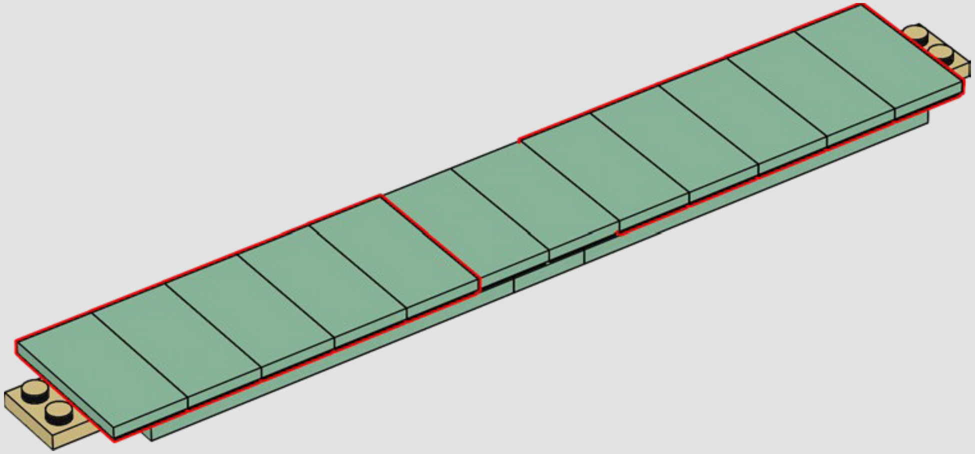

5

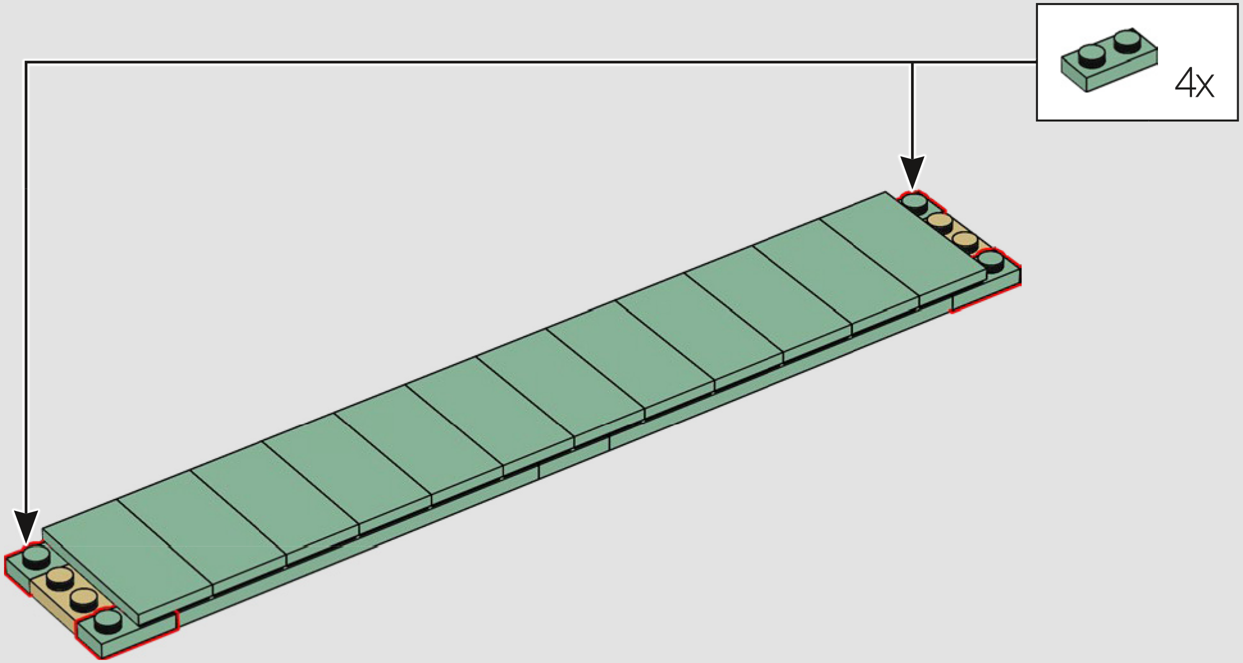

6

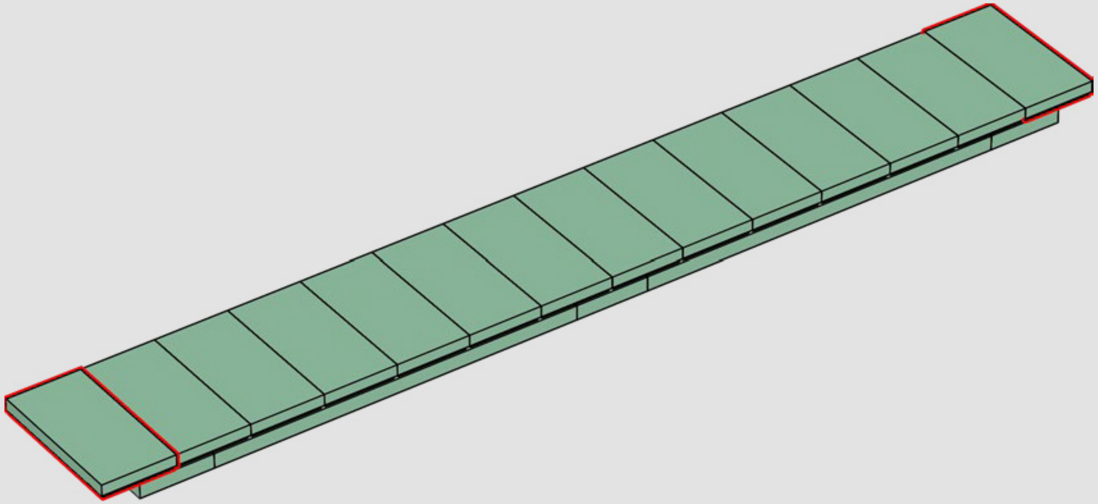

7

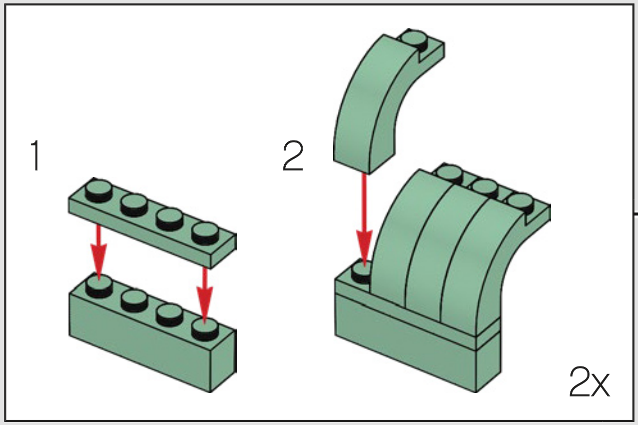

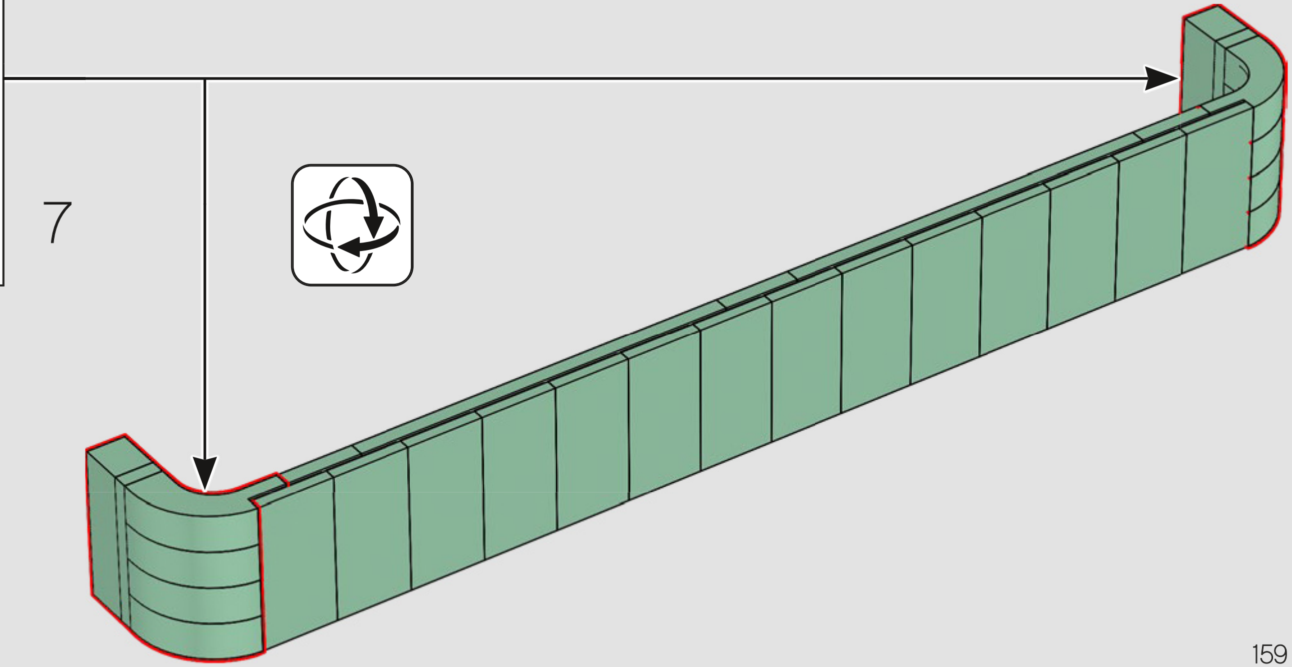

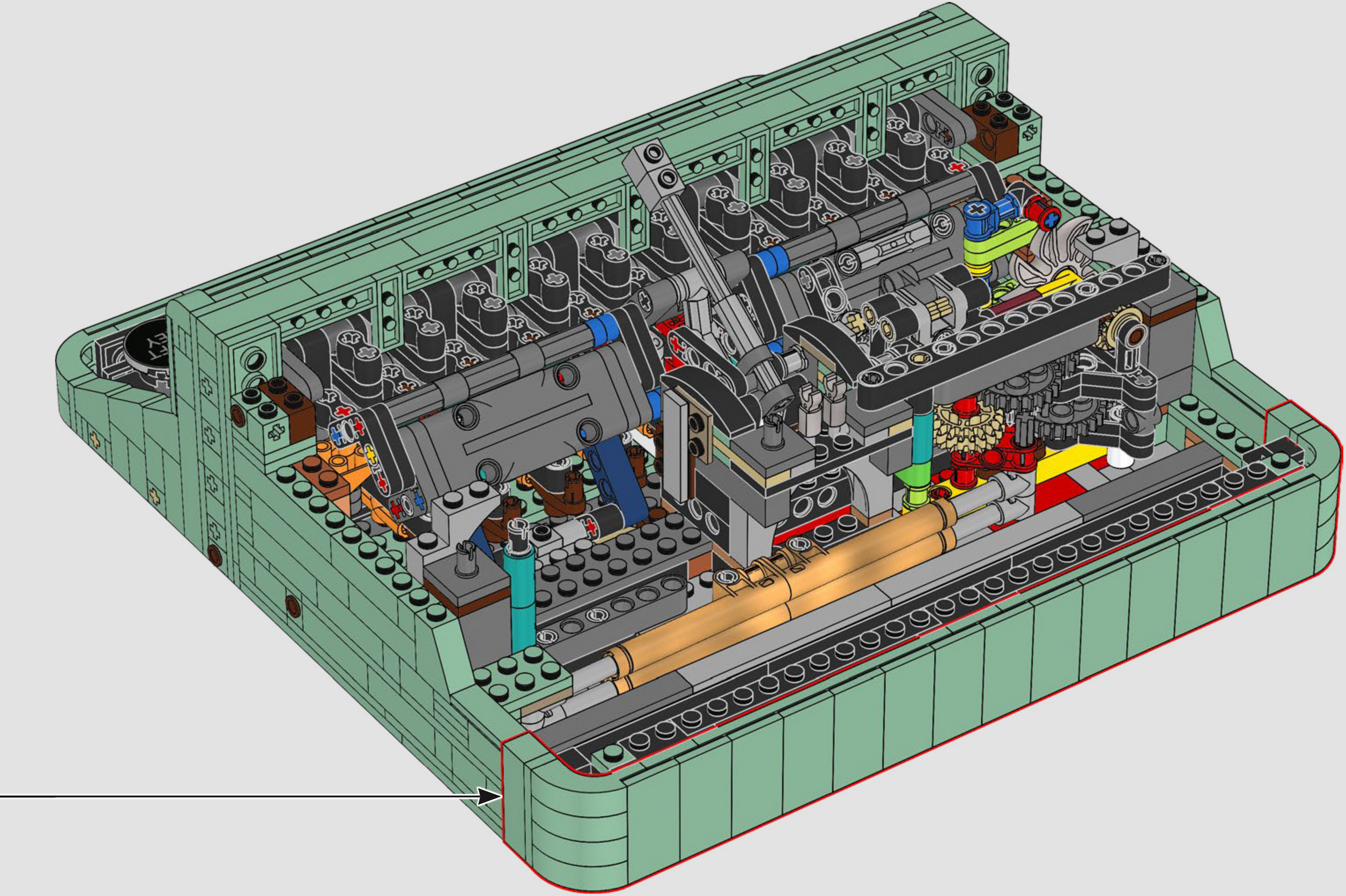

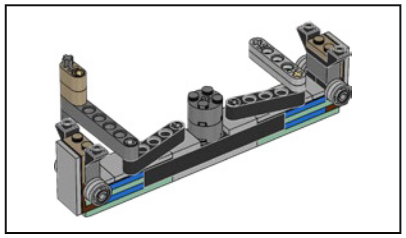

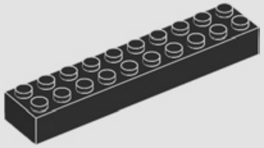

1x

217

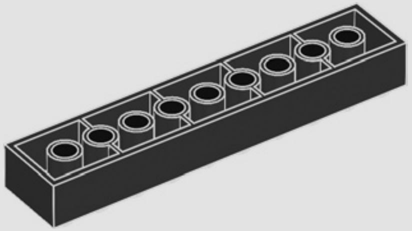

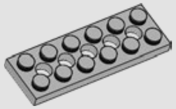

1x

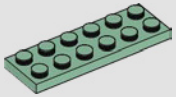

2x

218

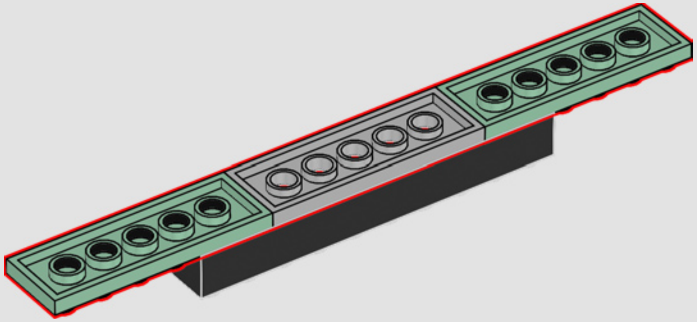

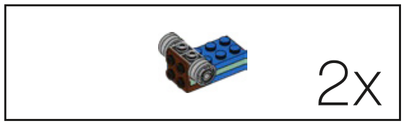

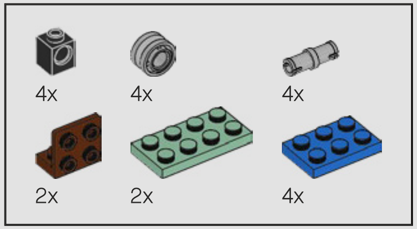
4x
4x
4x
2x
2x
4x

219

1

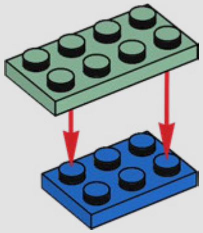

2

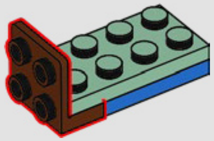

3

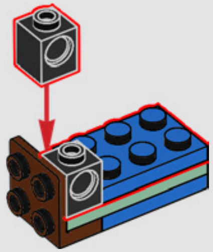

4

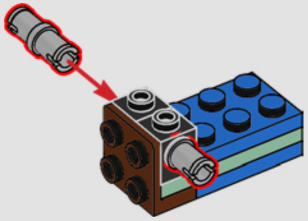

5

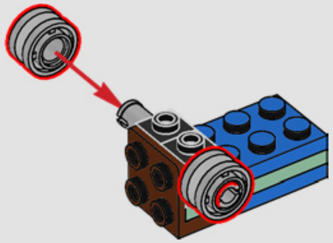

2x

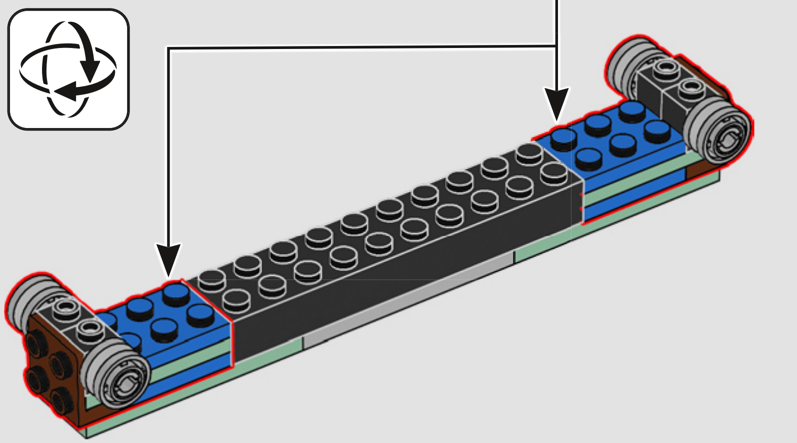

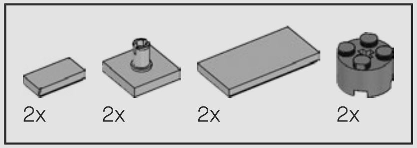

220

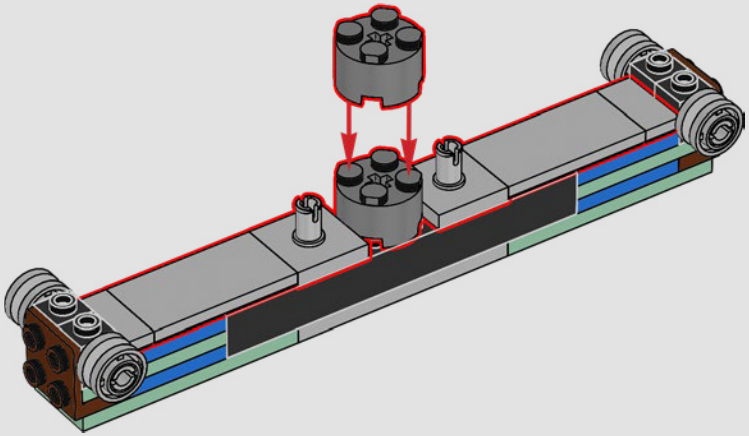

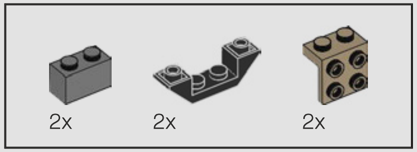

221

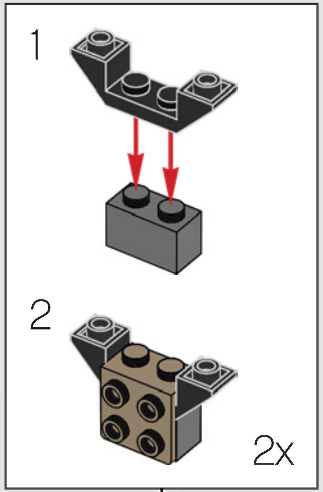

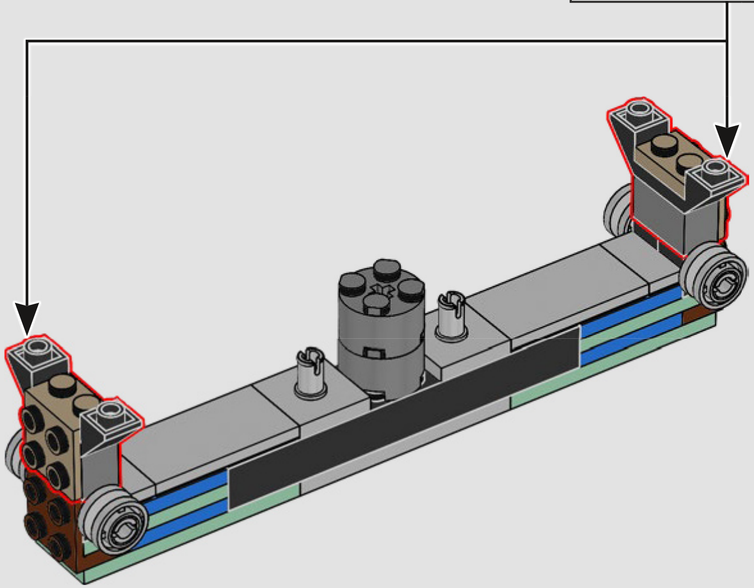

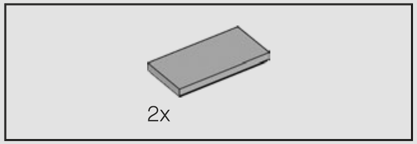

222

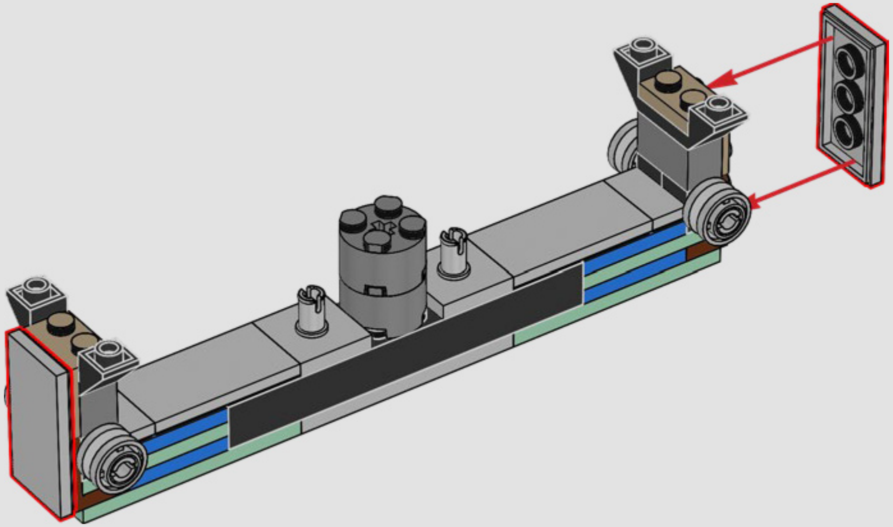

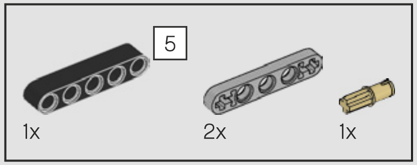

223

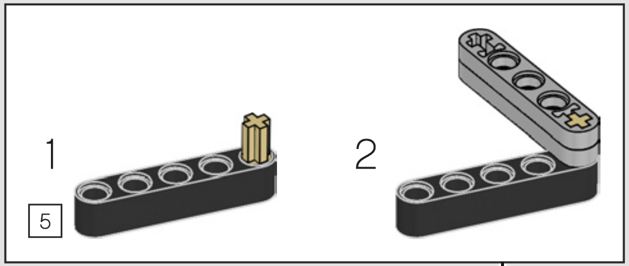

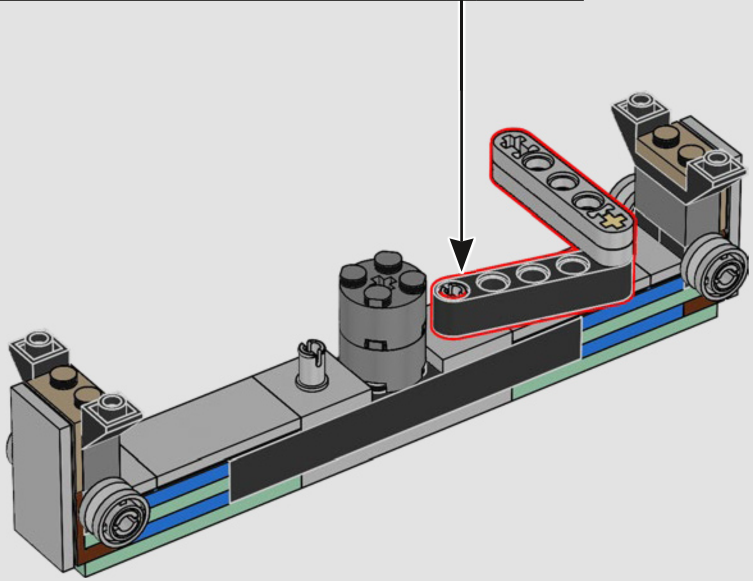

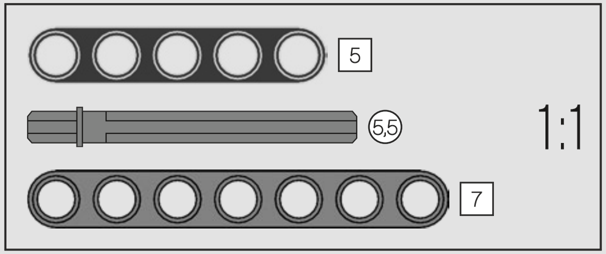

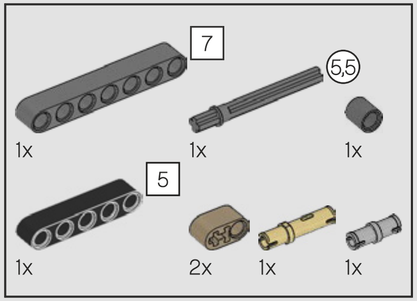
7
5,5
1x
1x
1x
5
1x
2x
1x
1x

224

1

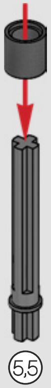

2

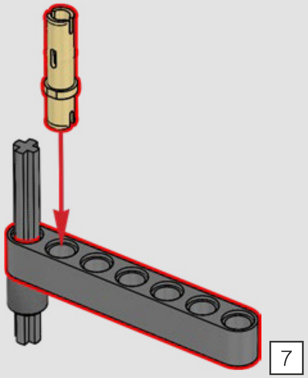

3

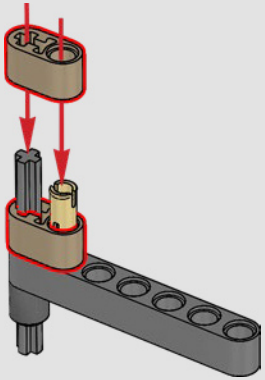

4

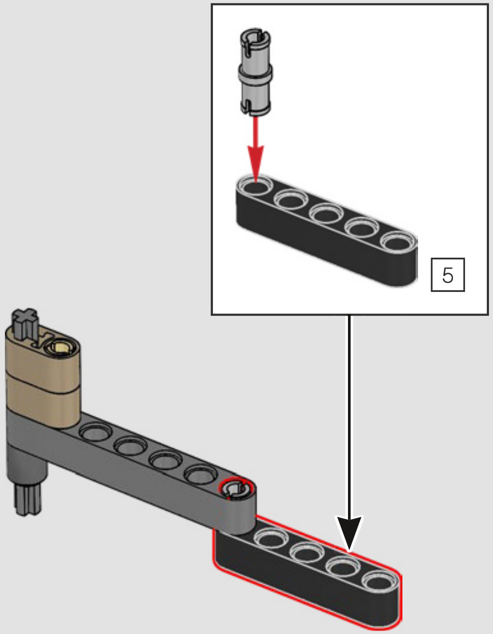

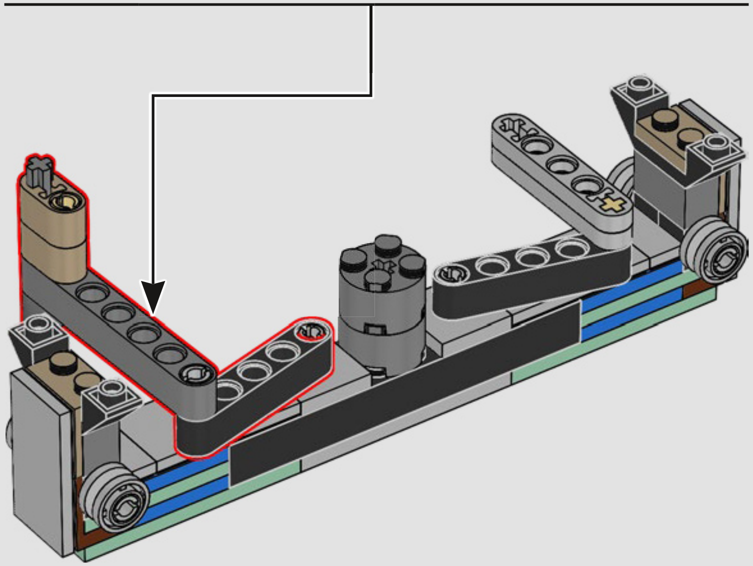

225

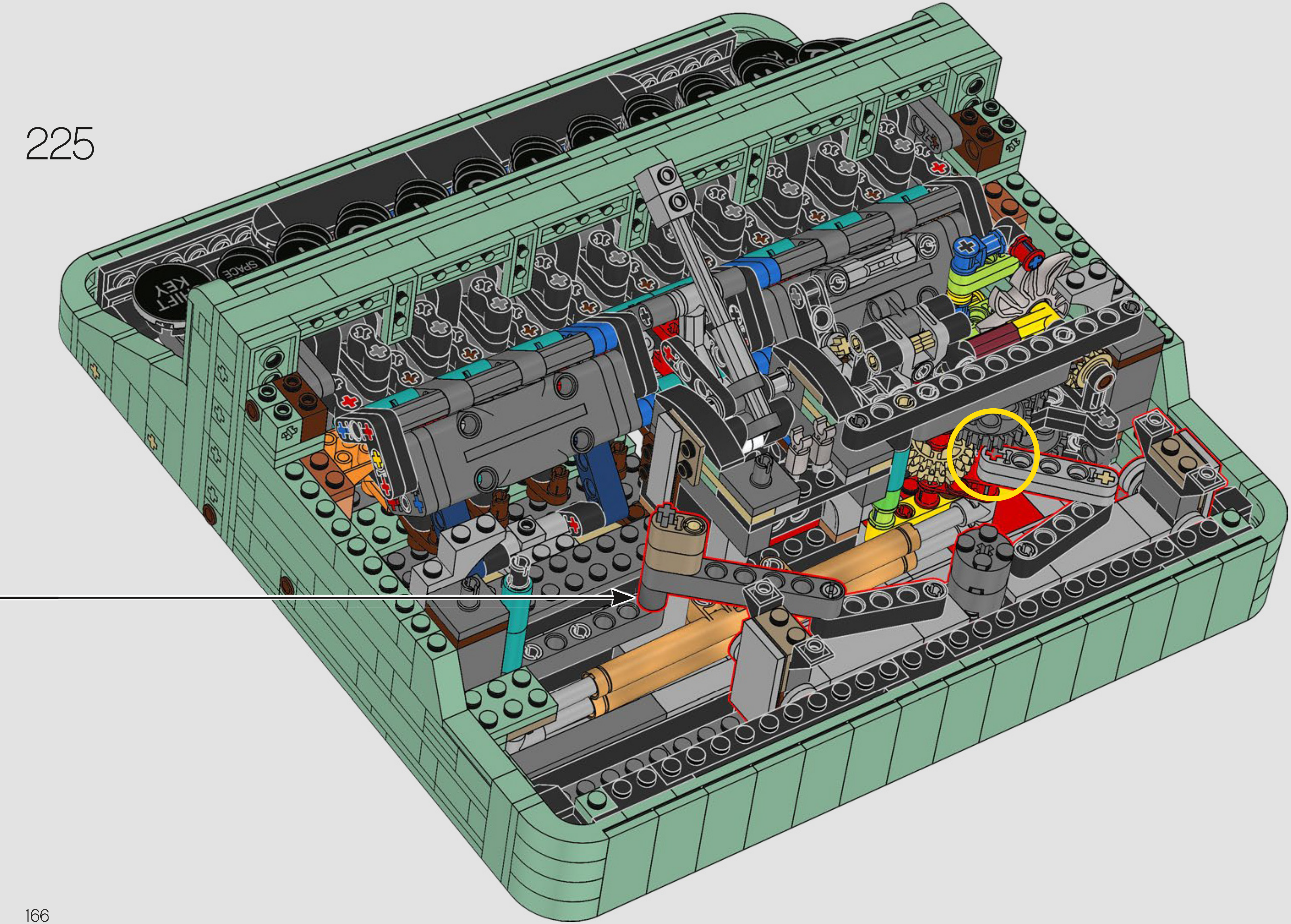
SHIFT KEY
SPACE

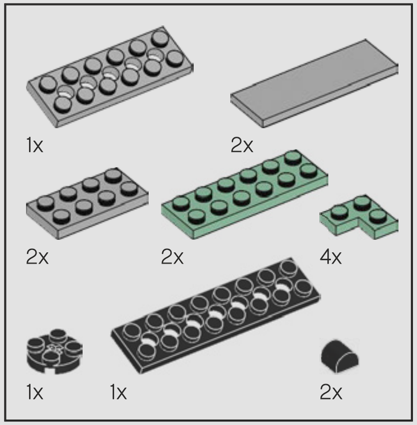
1x
2x
2x
2x
4x
1x
1x
2x

226

1

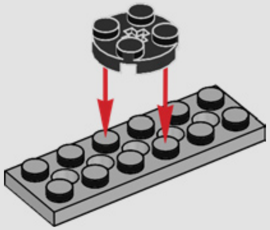

2

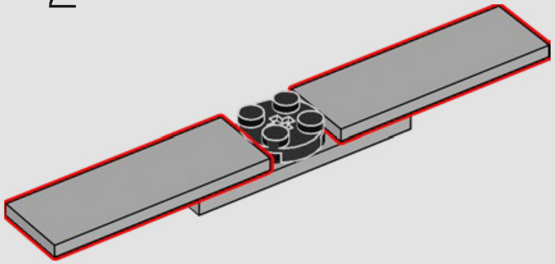

3

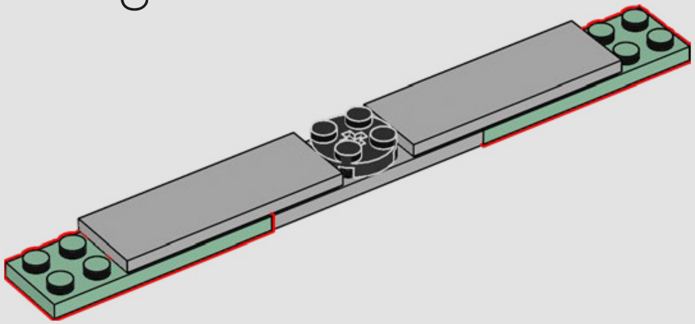

4

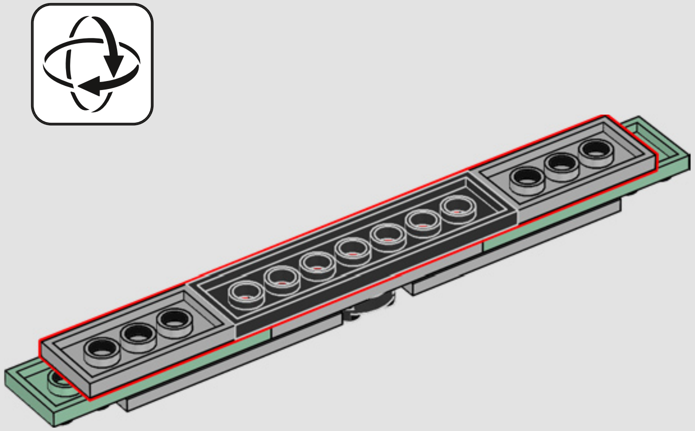

5

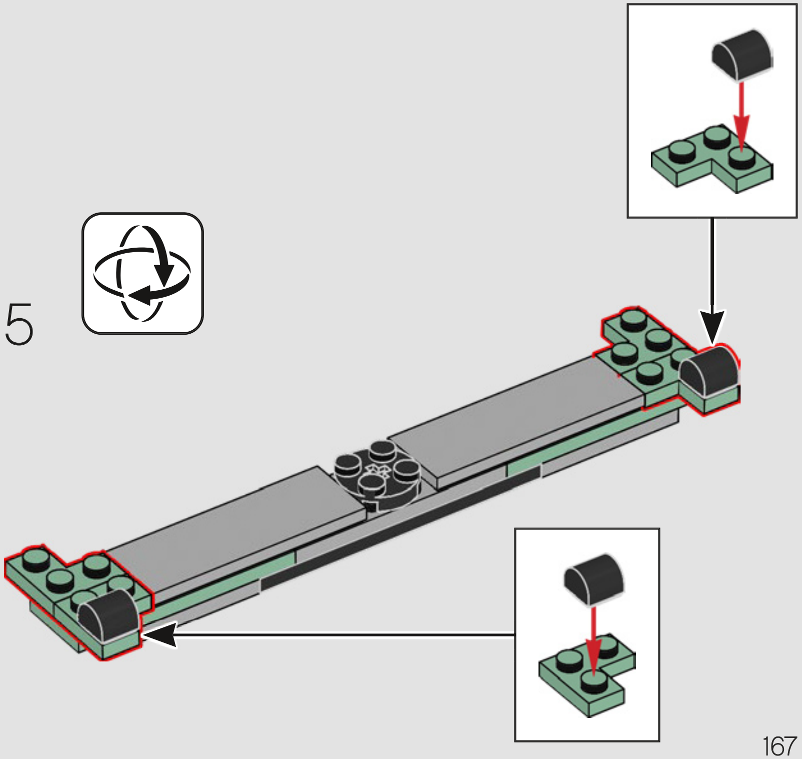

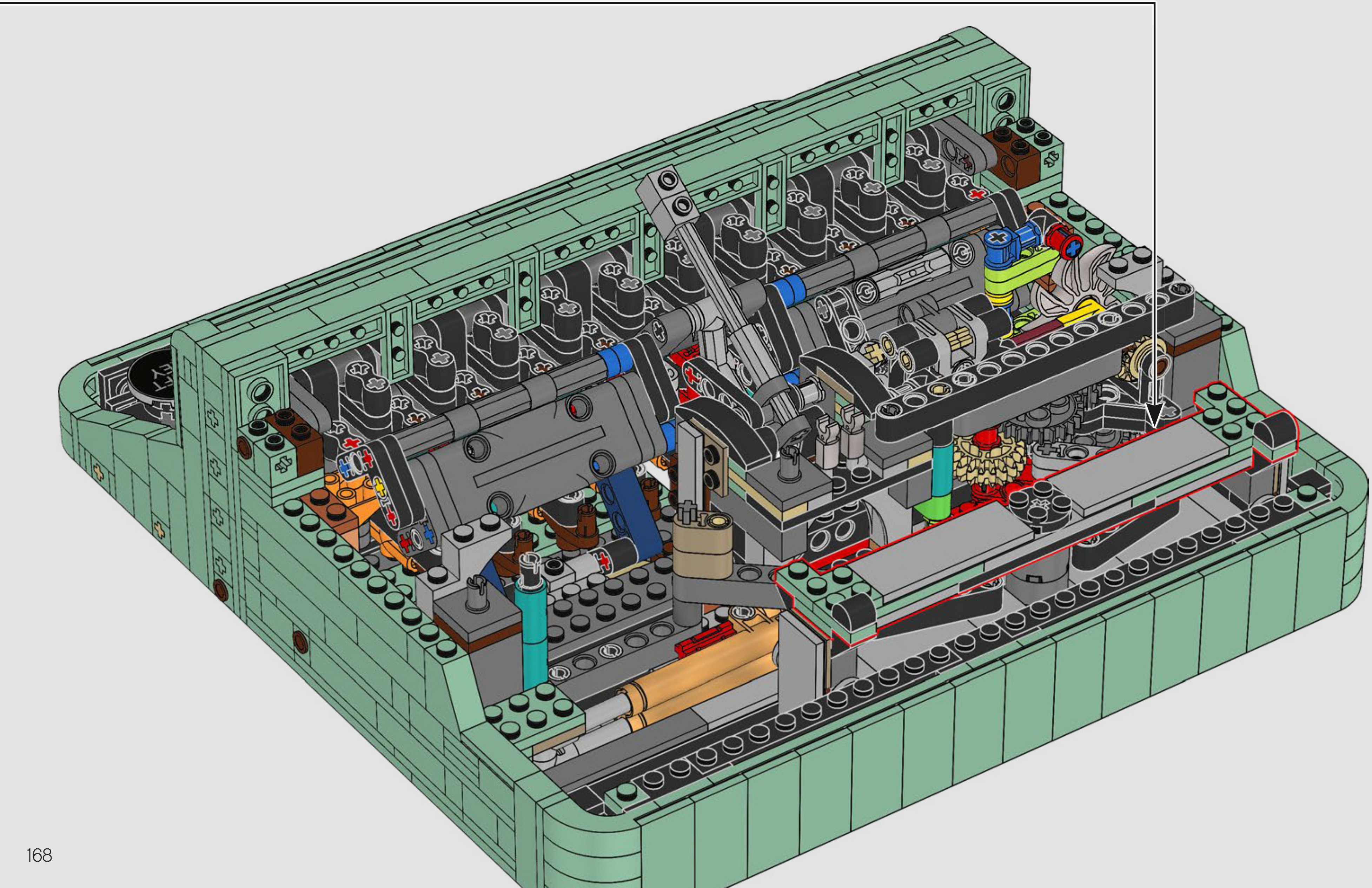

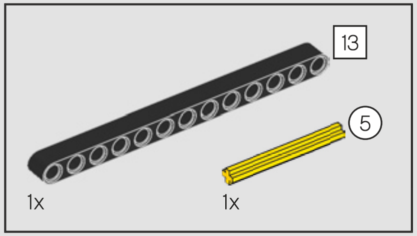

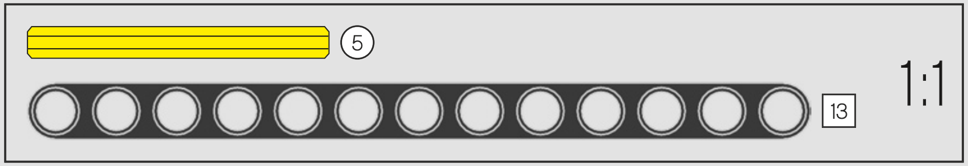

227

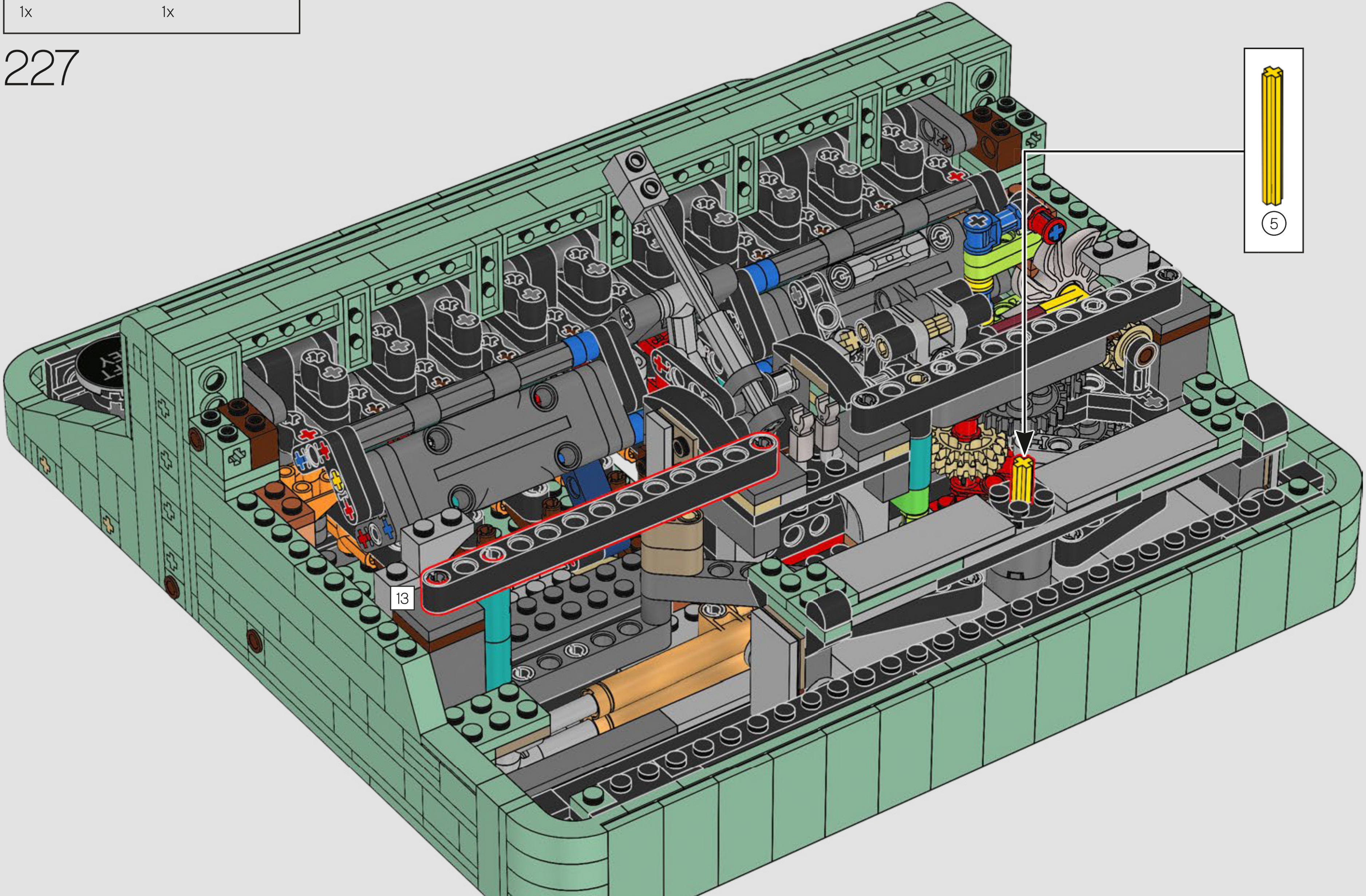

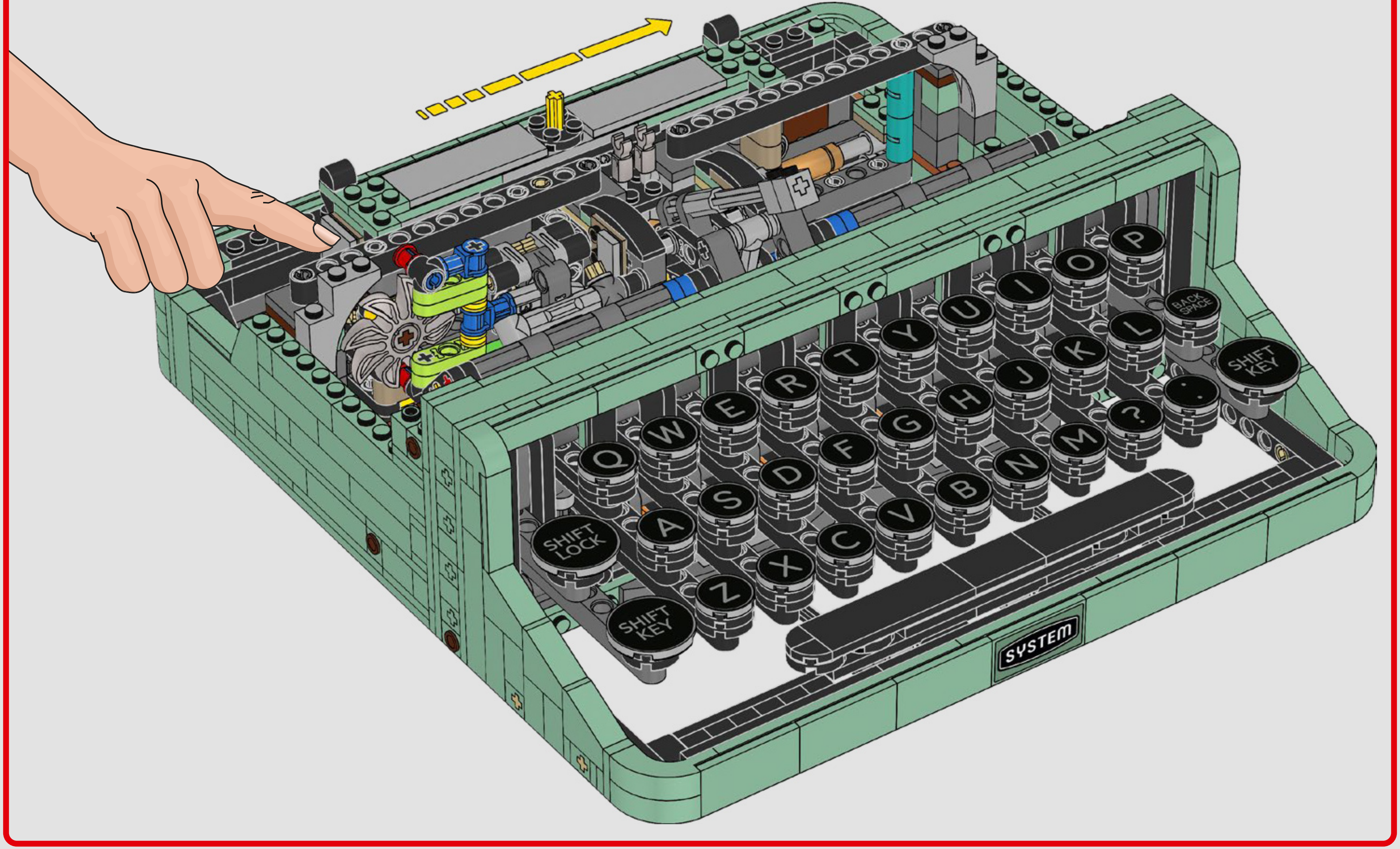

Q
W
E
R
T
Y
U
I
O
P
A
S
D
F
G
H
J
K
L
Z
X
C
V
B
N
M
?
.
SHIFT LOCK
SHIFT KEY
BACK SPACE
SHIFT KEY
SYSTEM

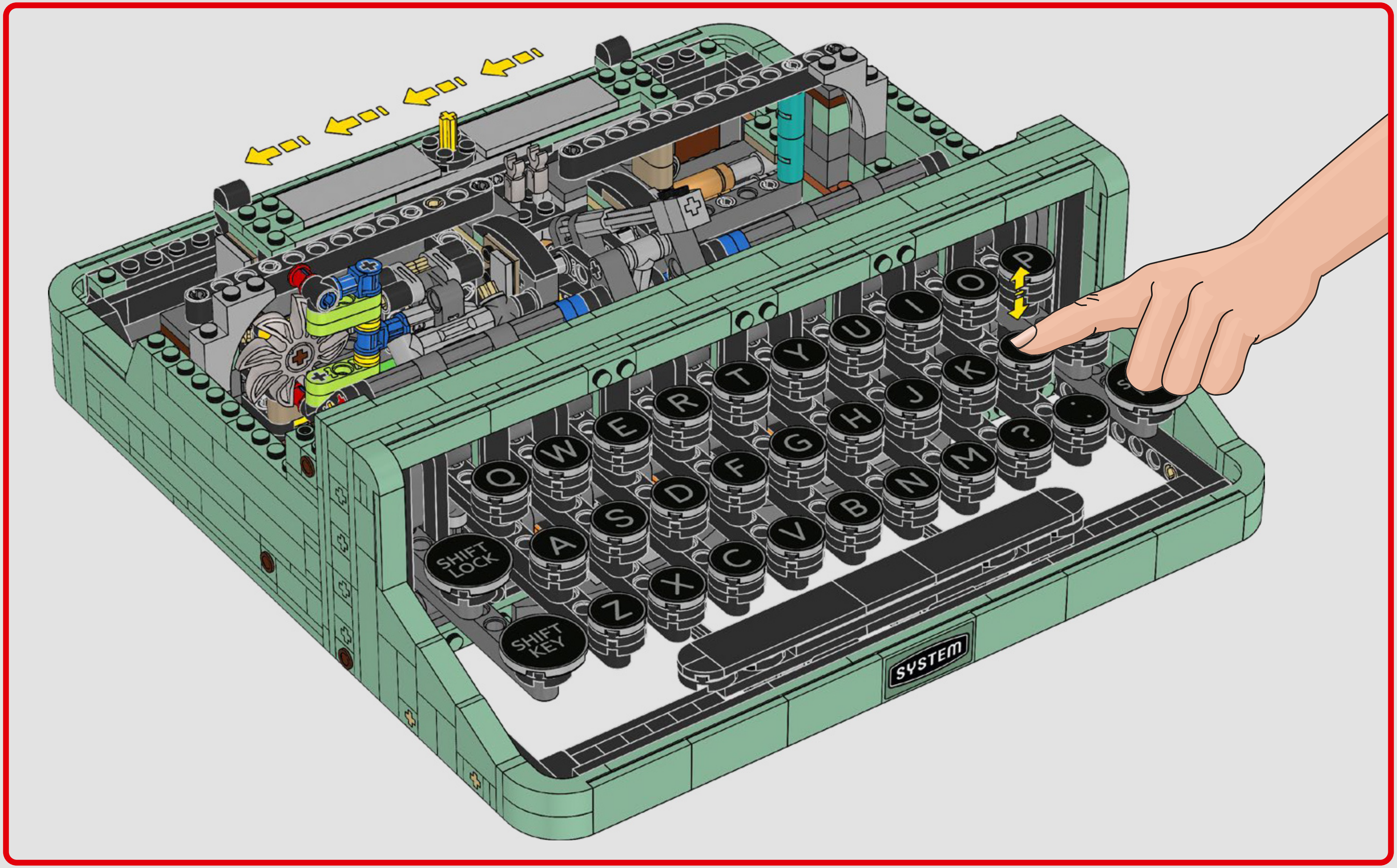
SHIFT LOCK
SHIFT KEY
SYSTEM

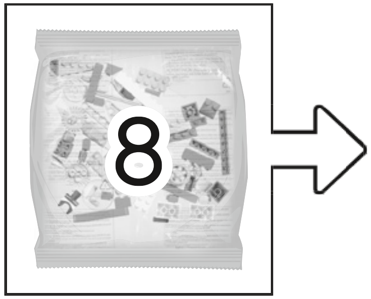
8

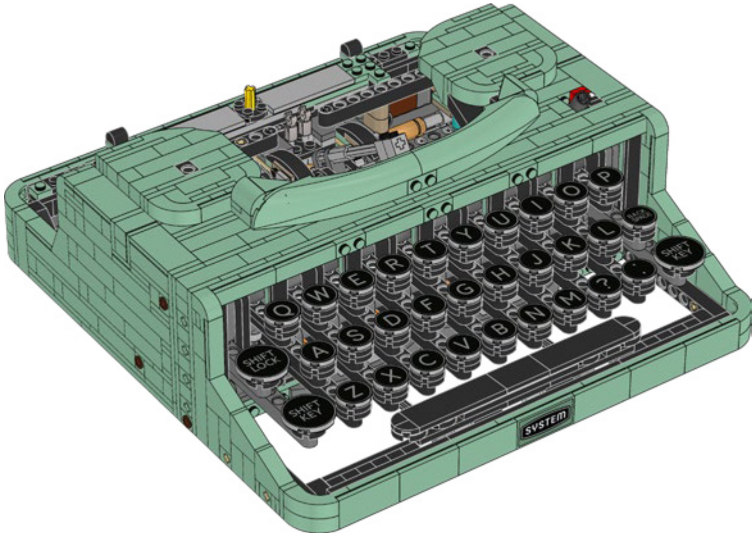

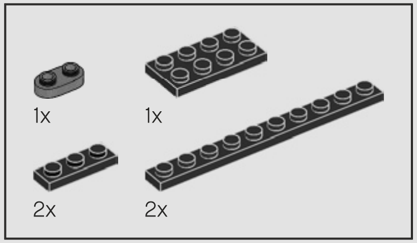

228

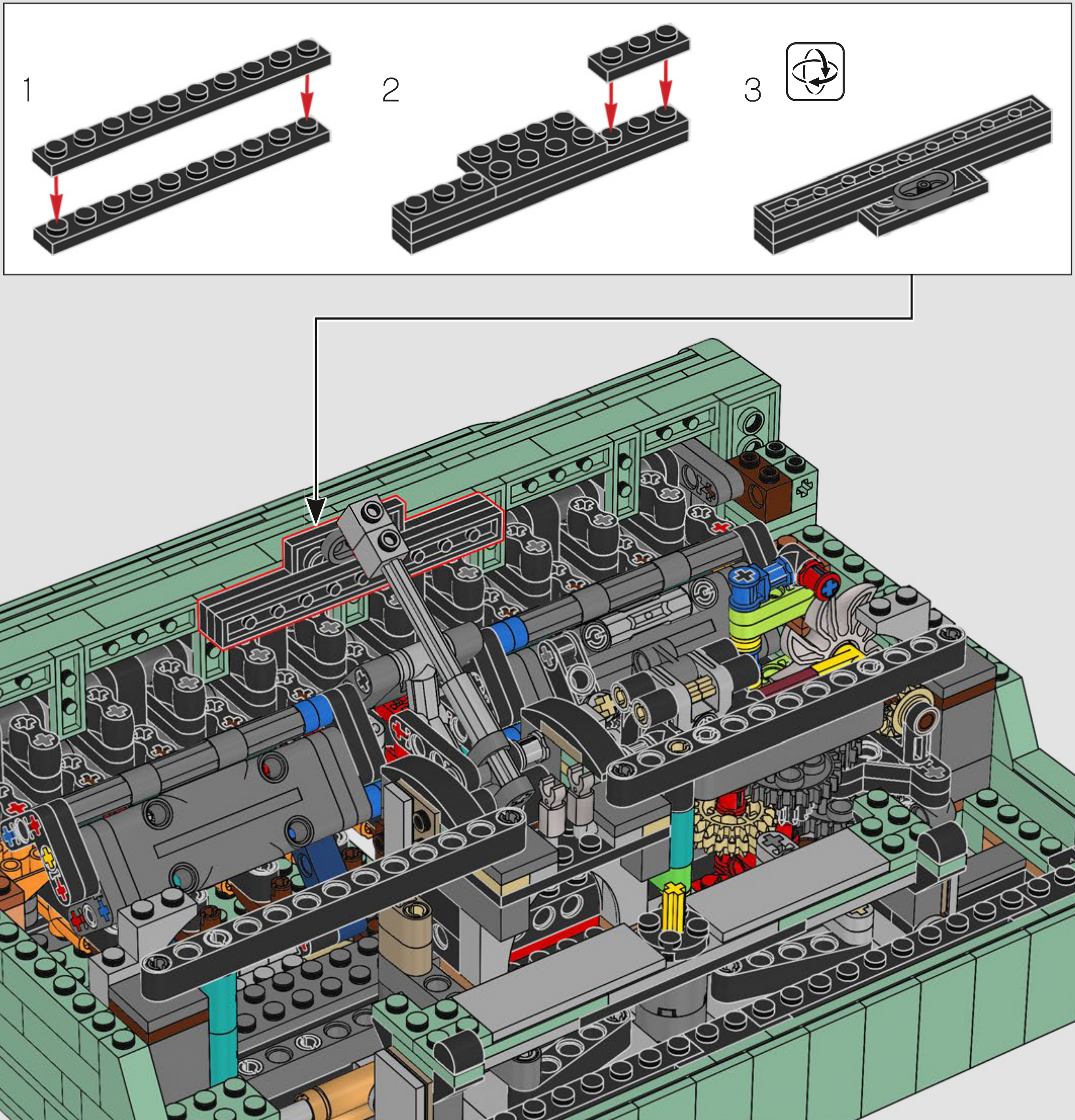

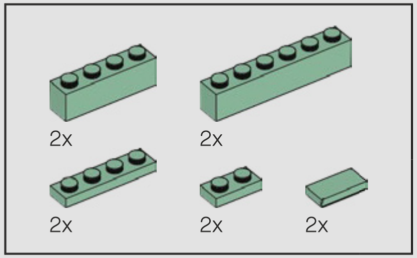
2x
2x
2x
2x
2x

229

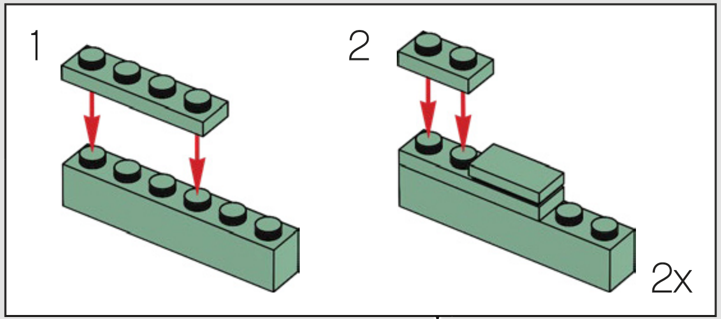

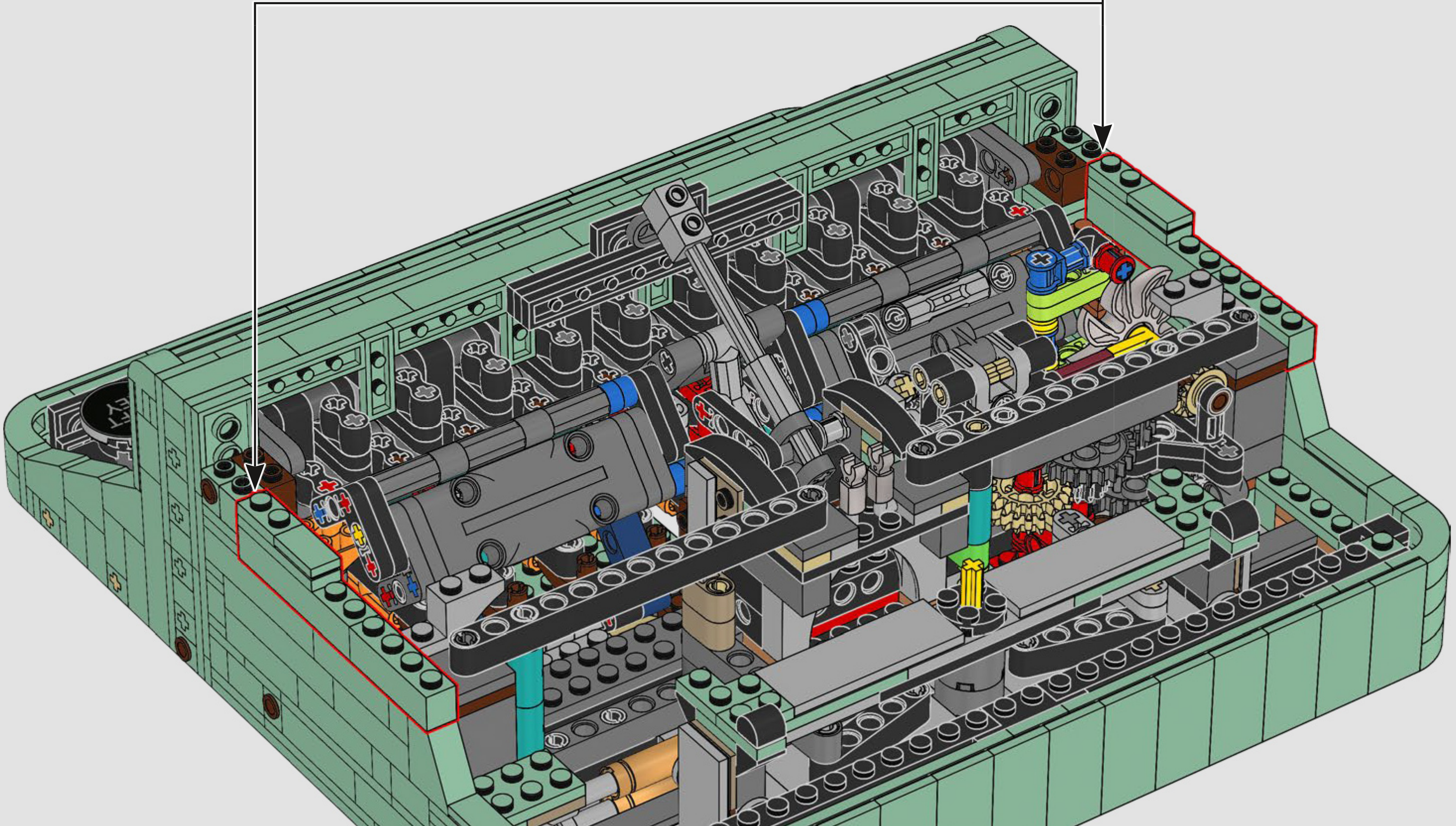

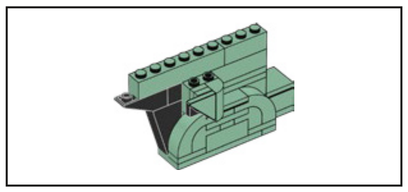

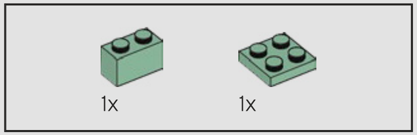

230

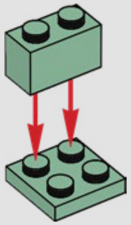

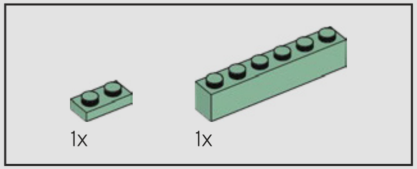

231

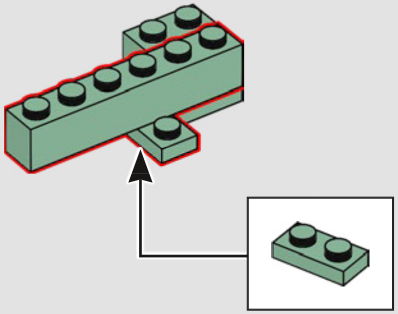

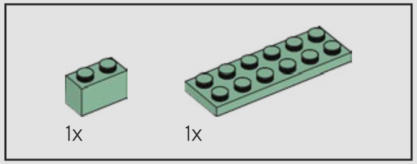

232

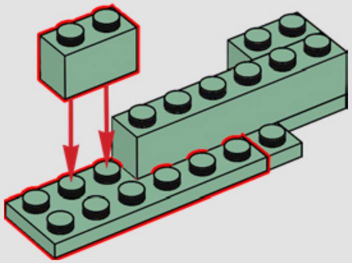

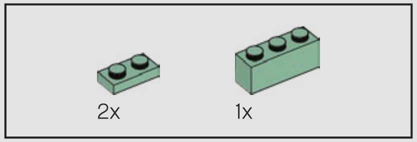

233

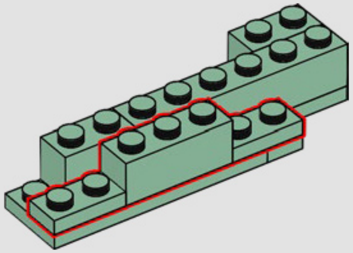

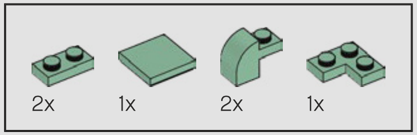

234

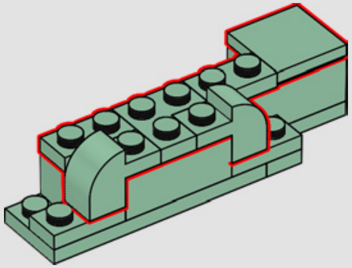

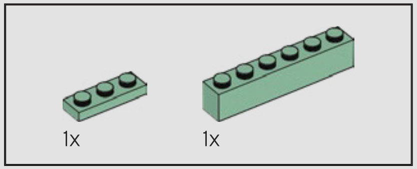

235

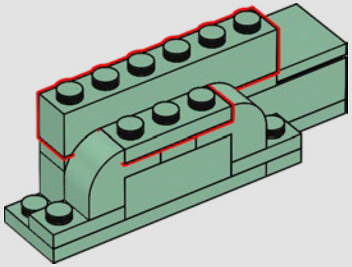

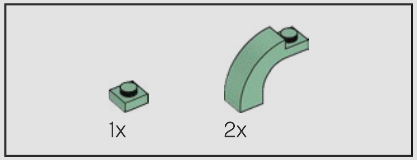

236

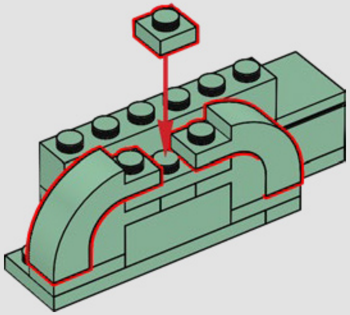

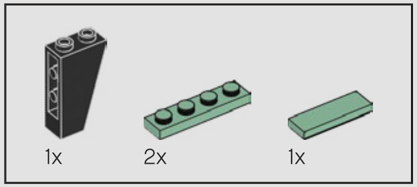

237

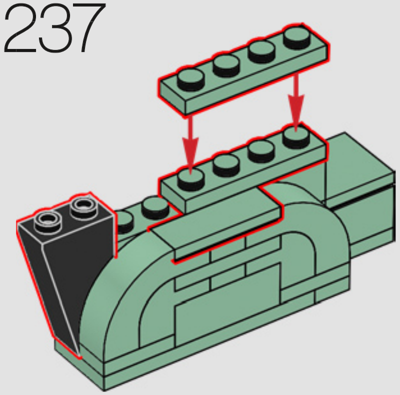

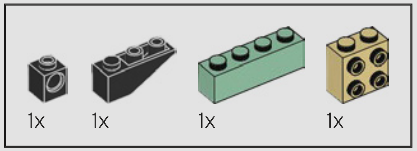

238

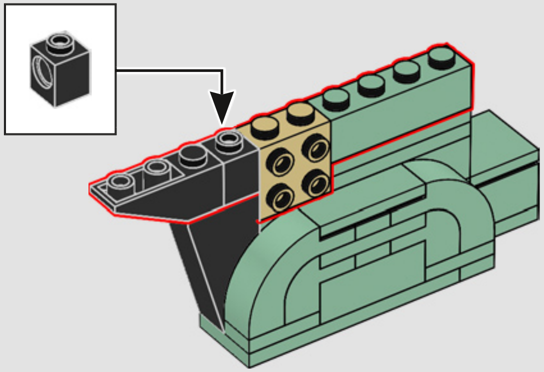

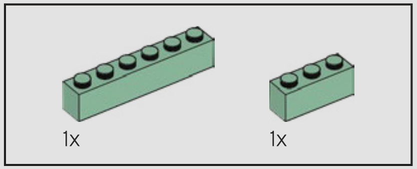

239

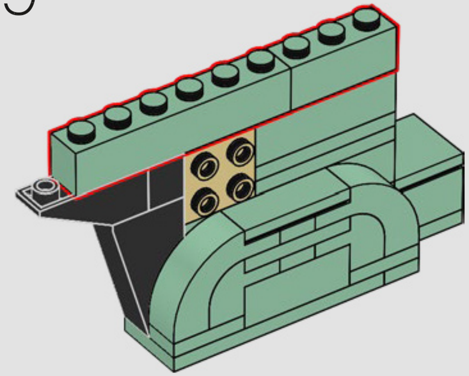

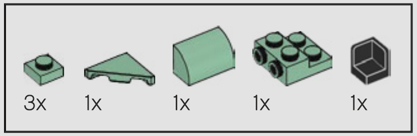
3x
1x
1x
1x
1x

240

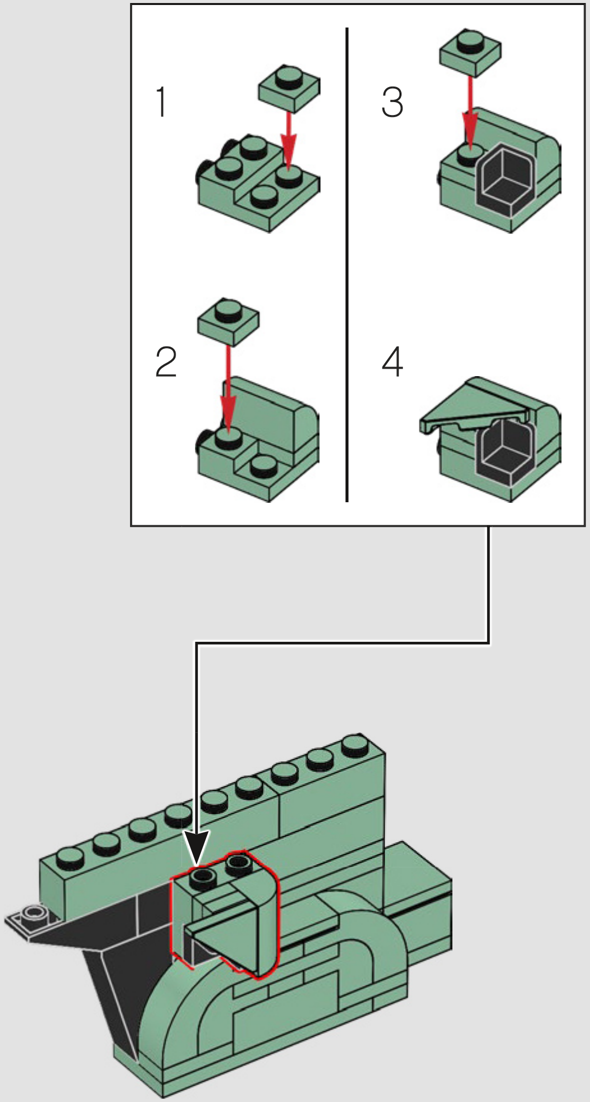

241

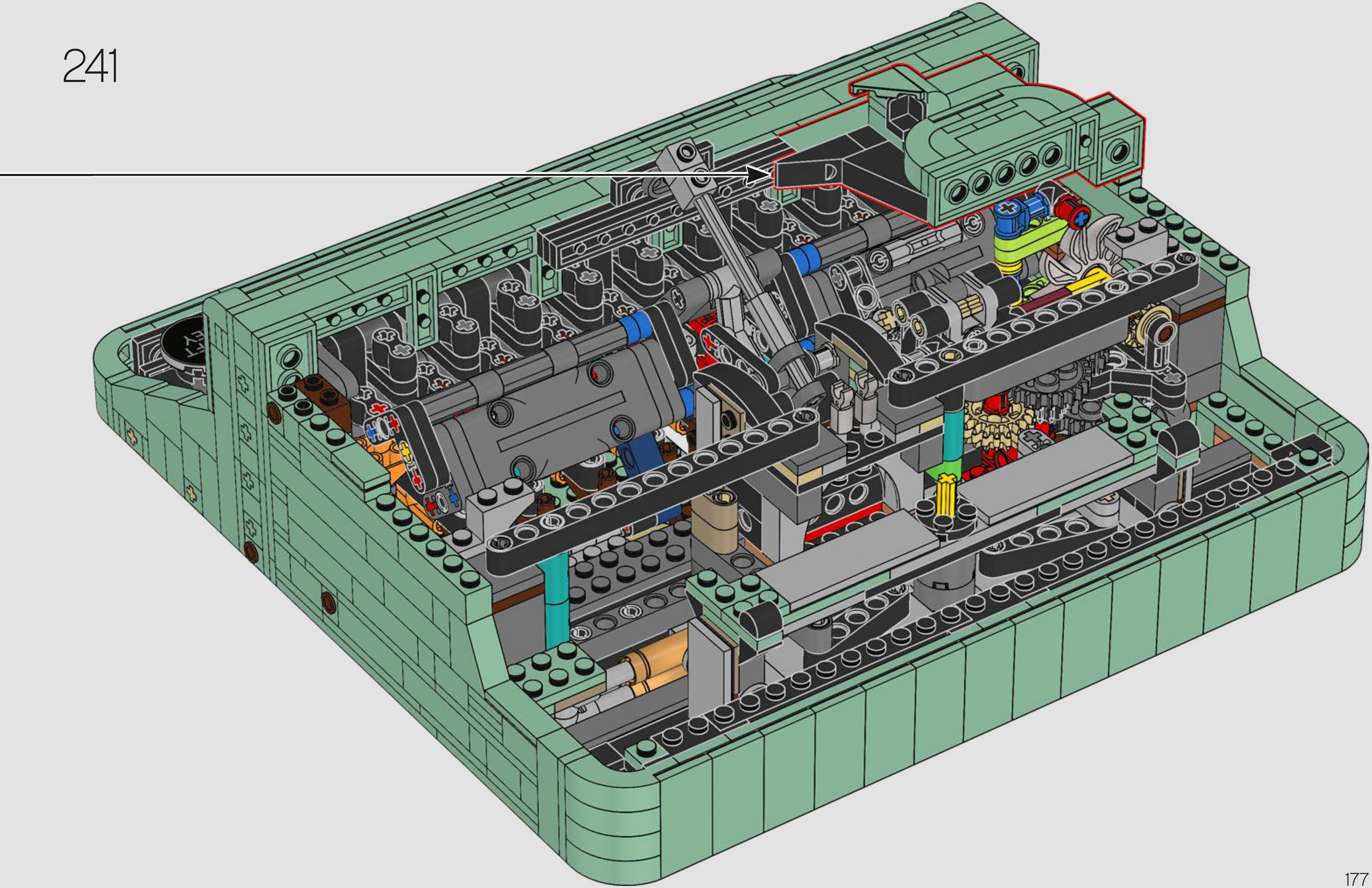

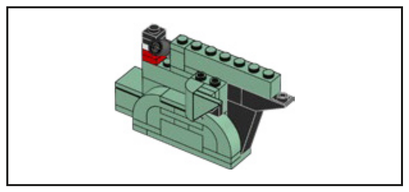

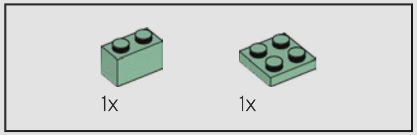

242

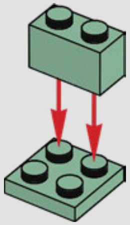

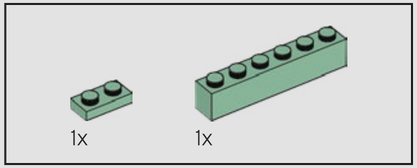

243

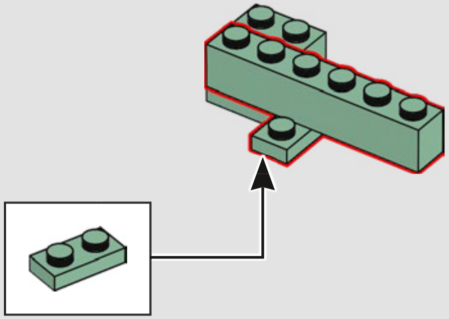

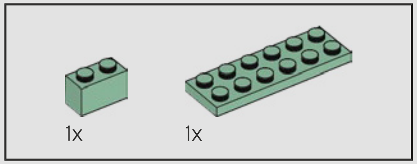

244

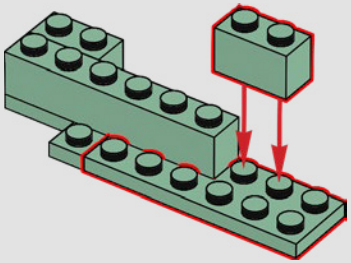

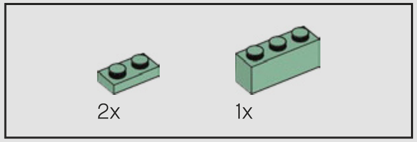

245

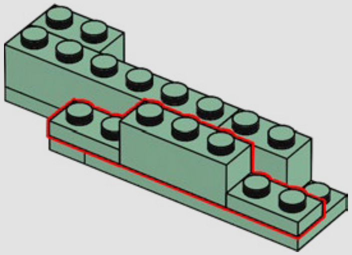

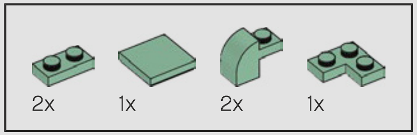

246

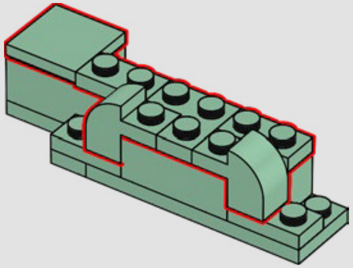

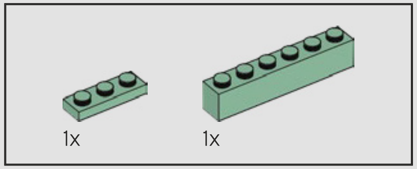

247

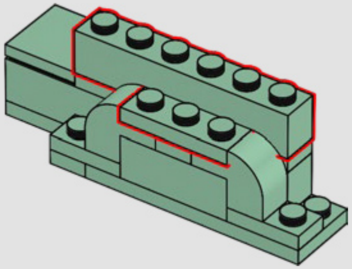

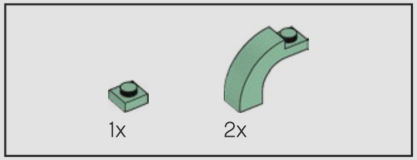

248

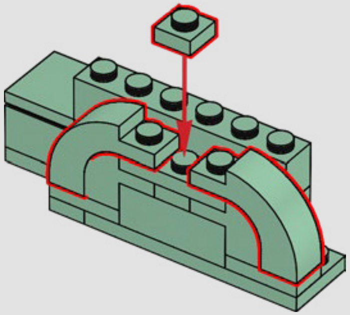

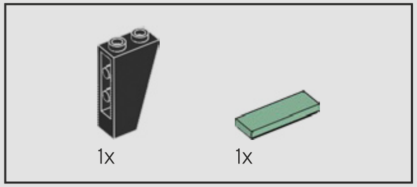

249

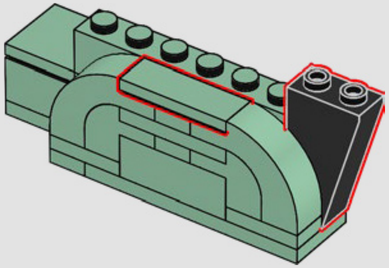

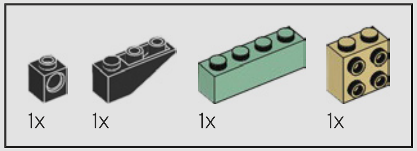

250

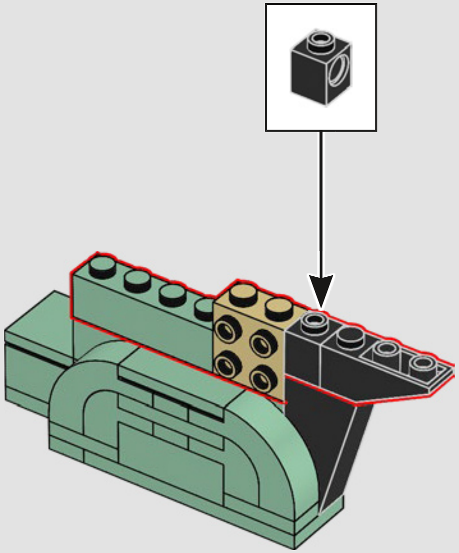

251

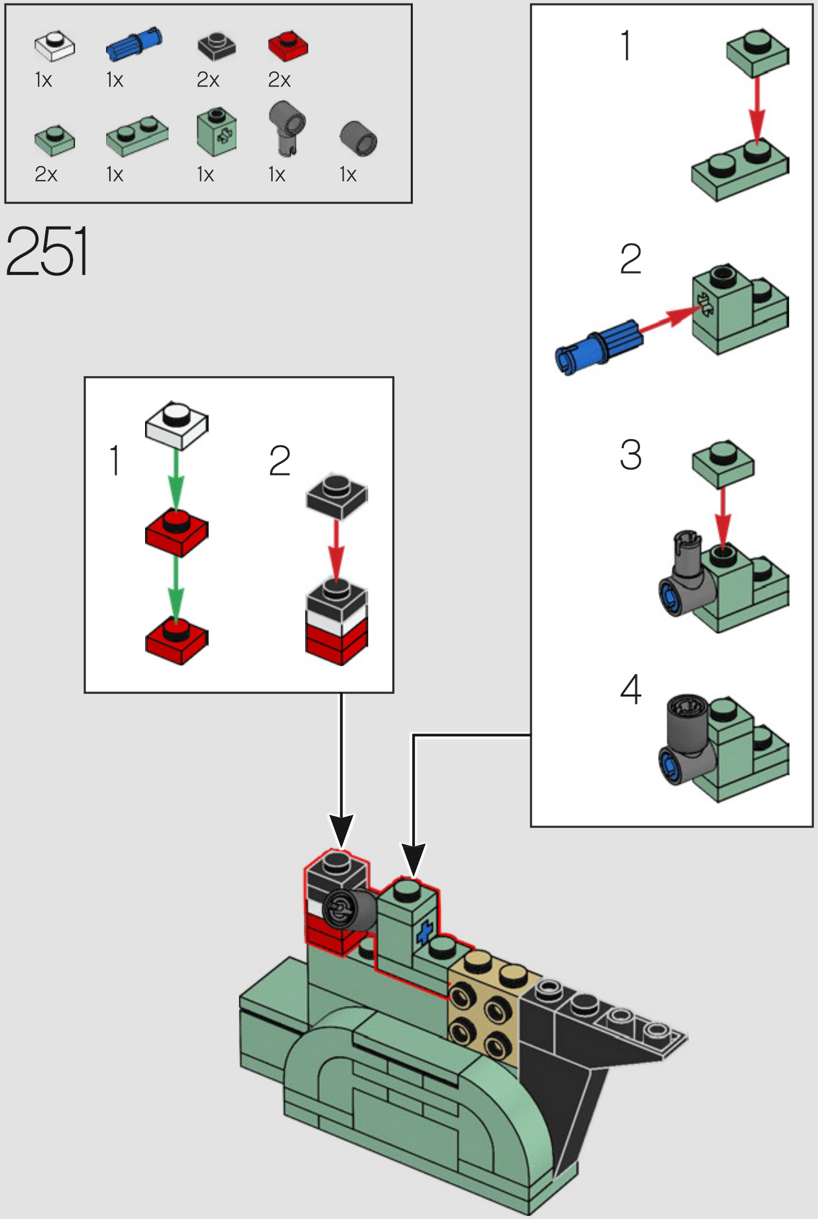
1x
1x
2x
2x
2x
1x
1x
1x
1x
1
2
1
2
3
4

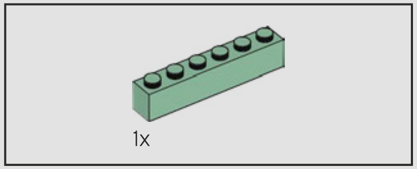

252

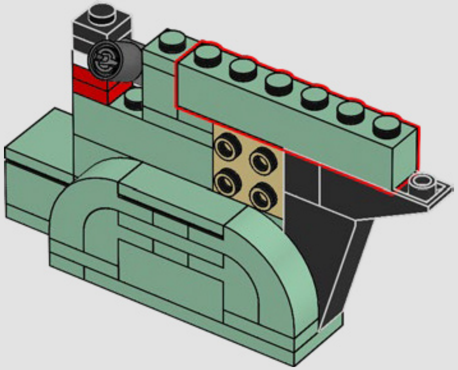

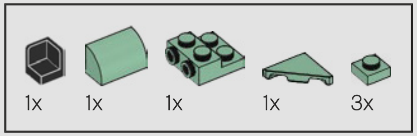
1x
1x
1x
1x
3x

253

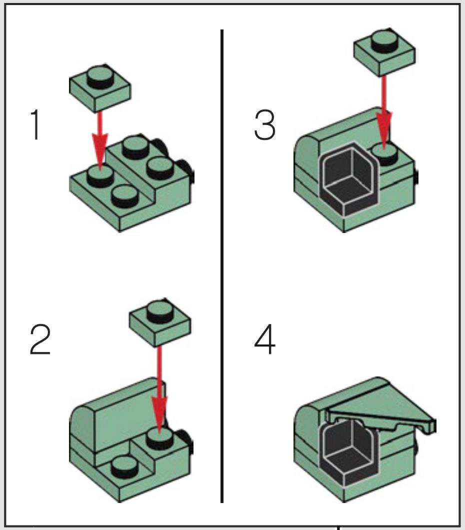

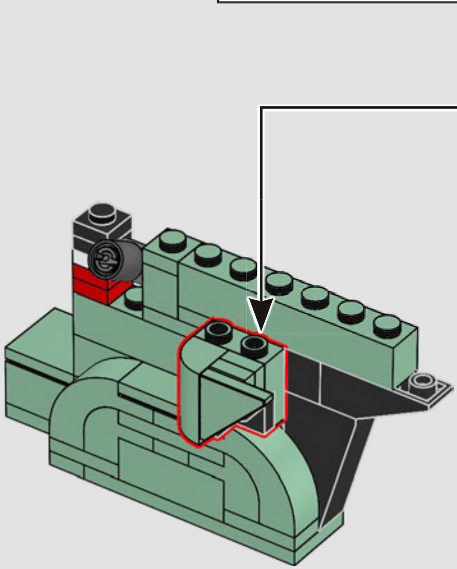

254

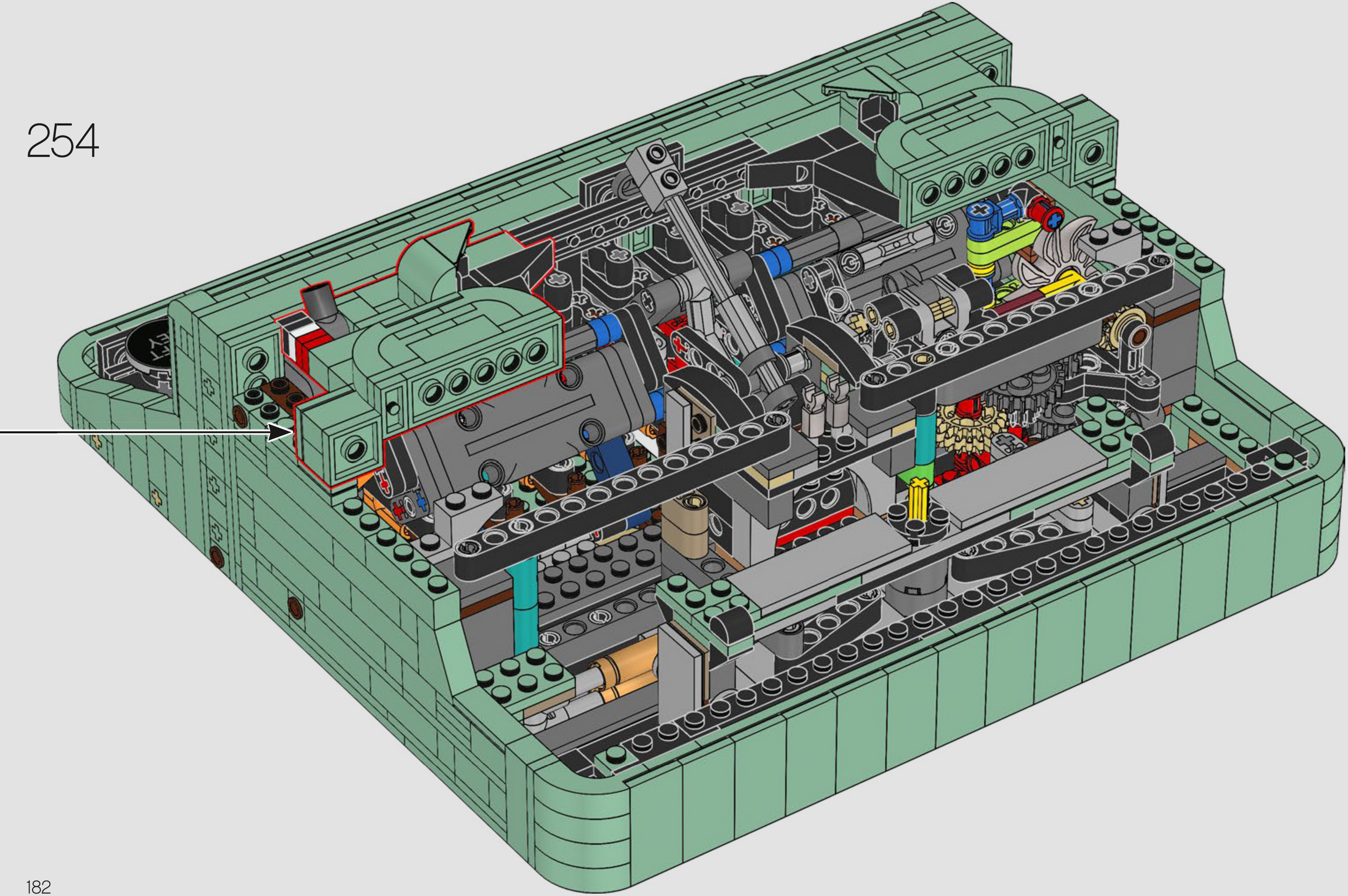

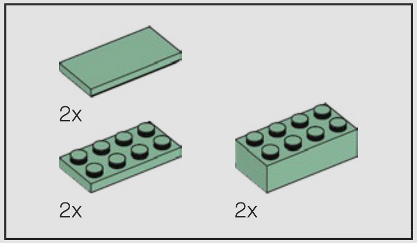

255

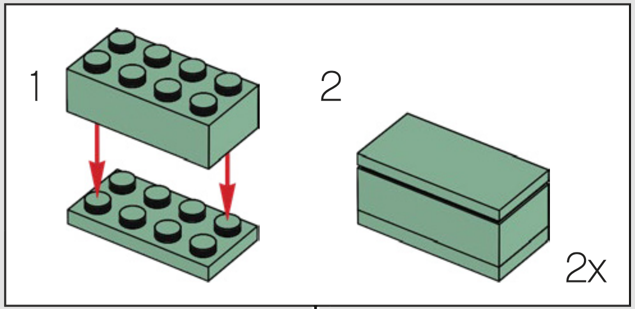

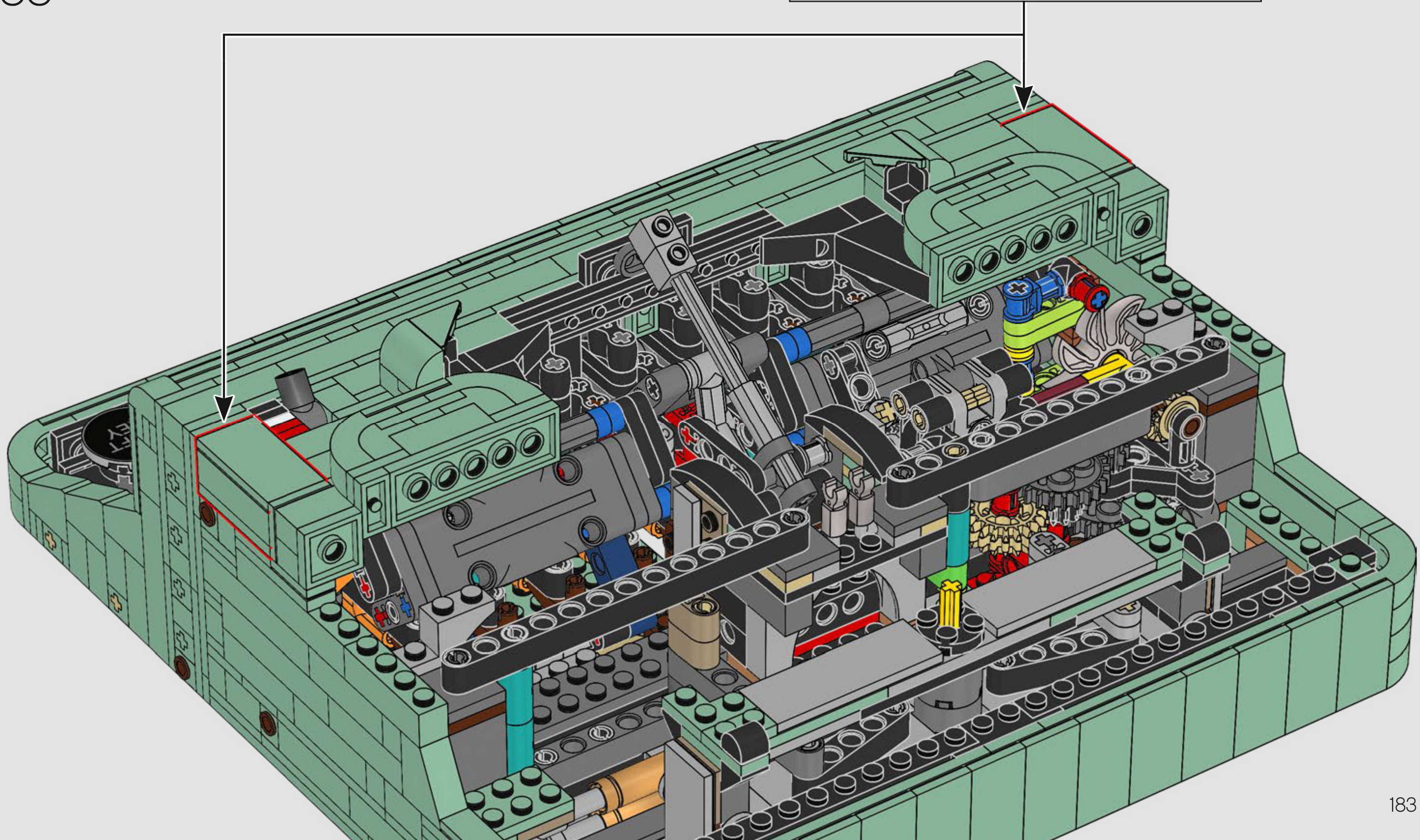

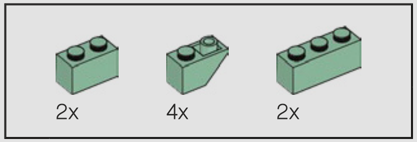

256

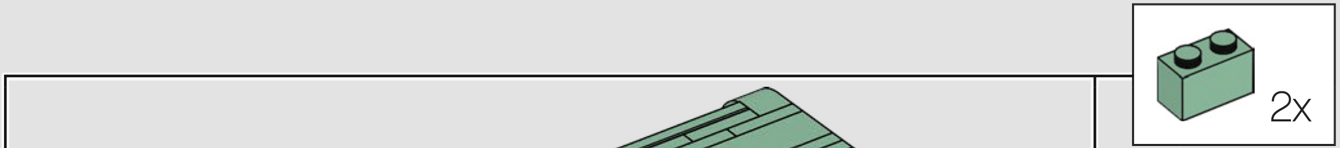

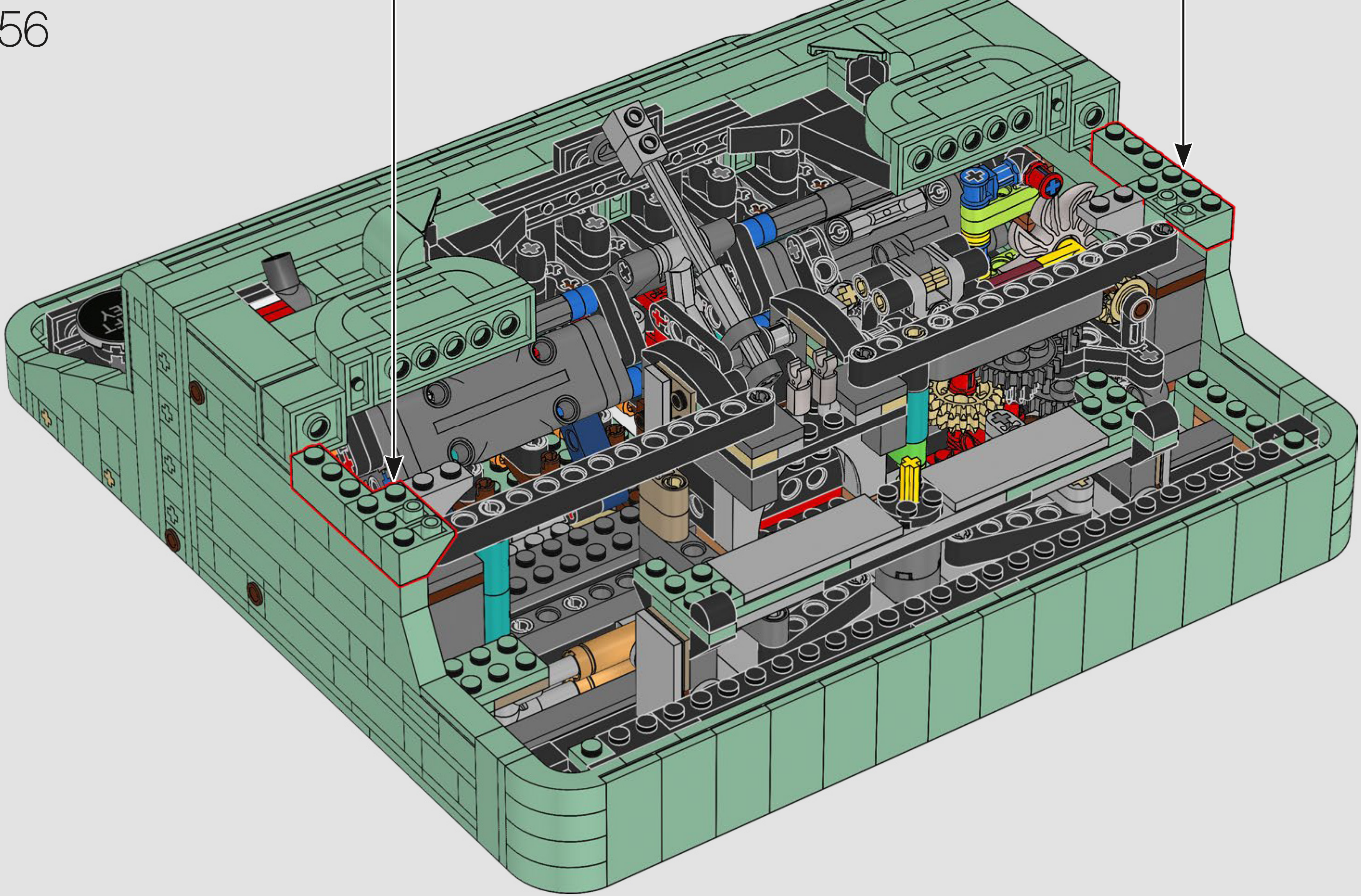

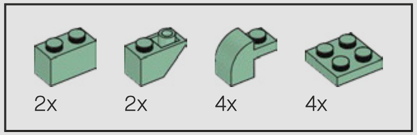

257

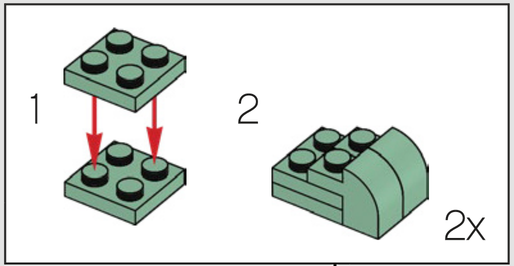

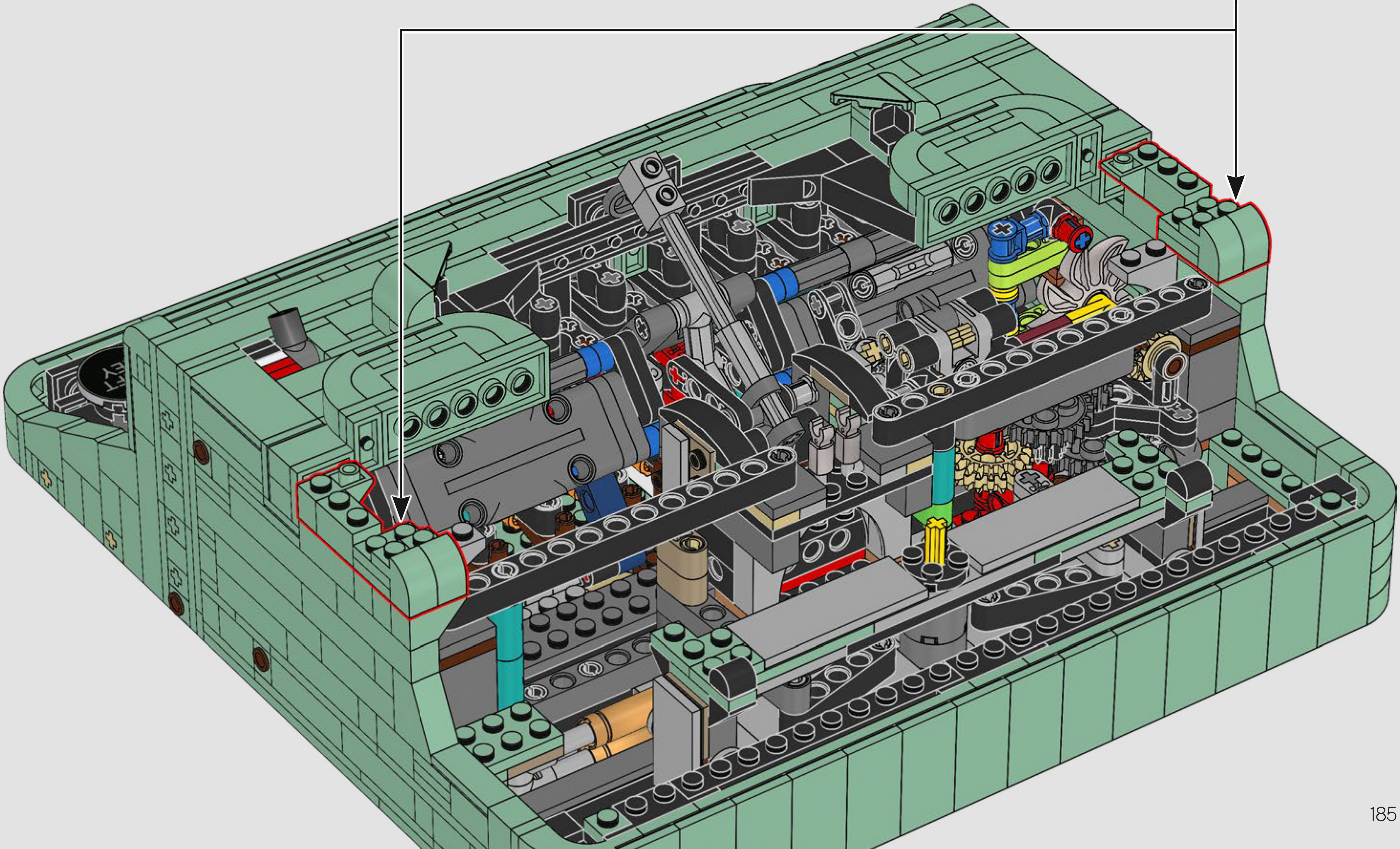

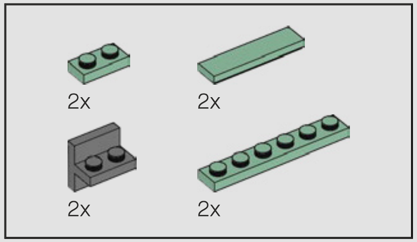

258

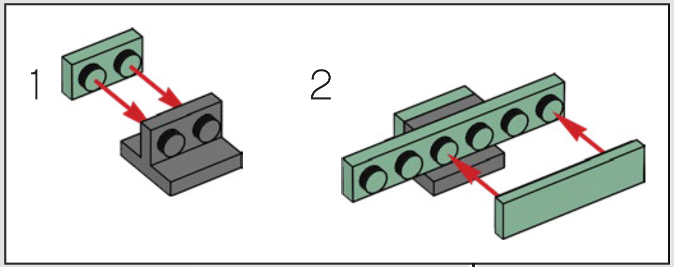

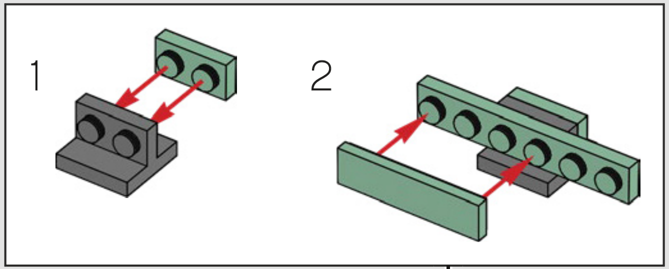

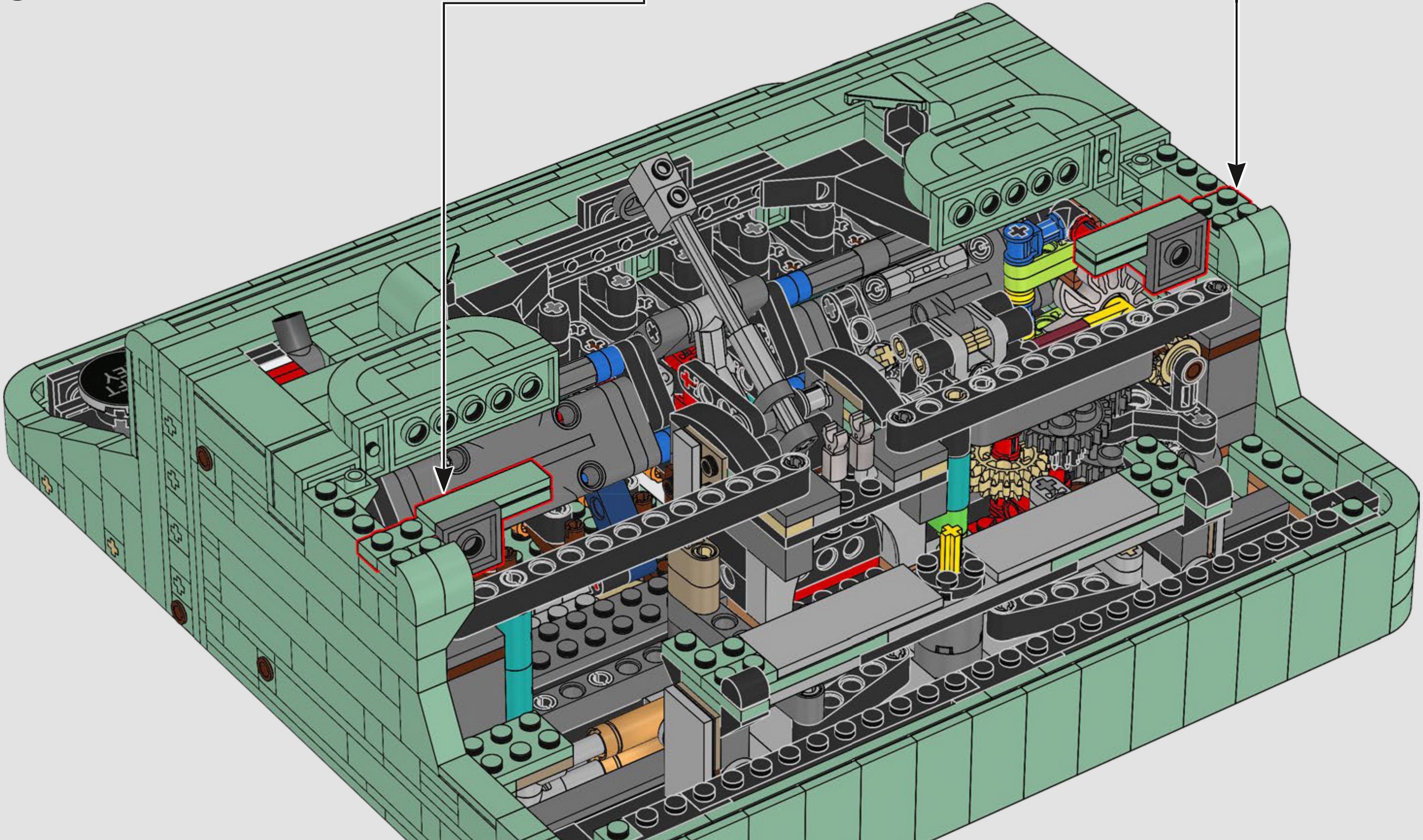

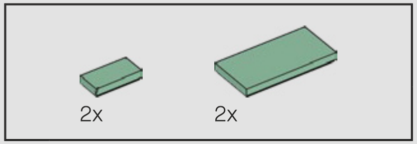

259

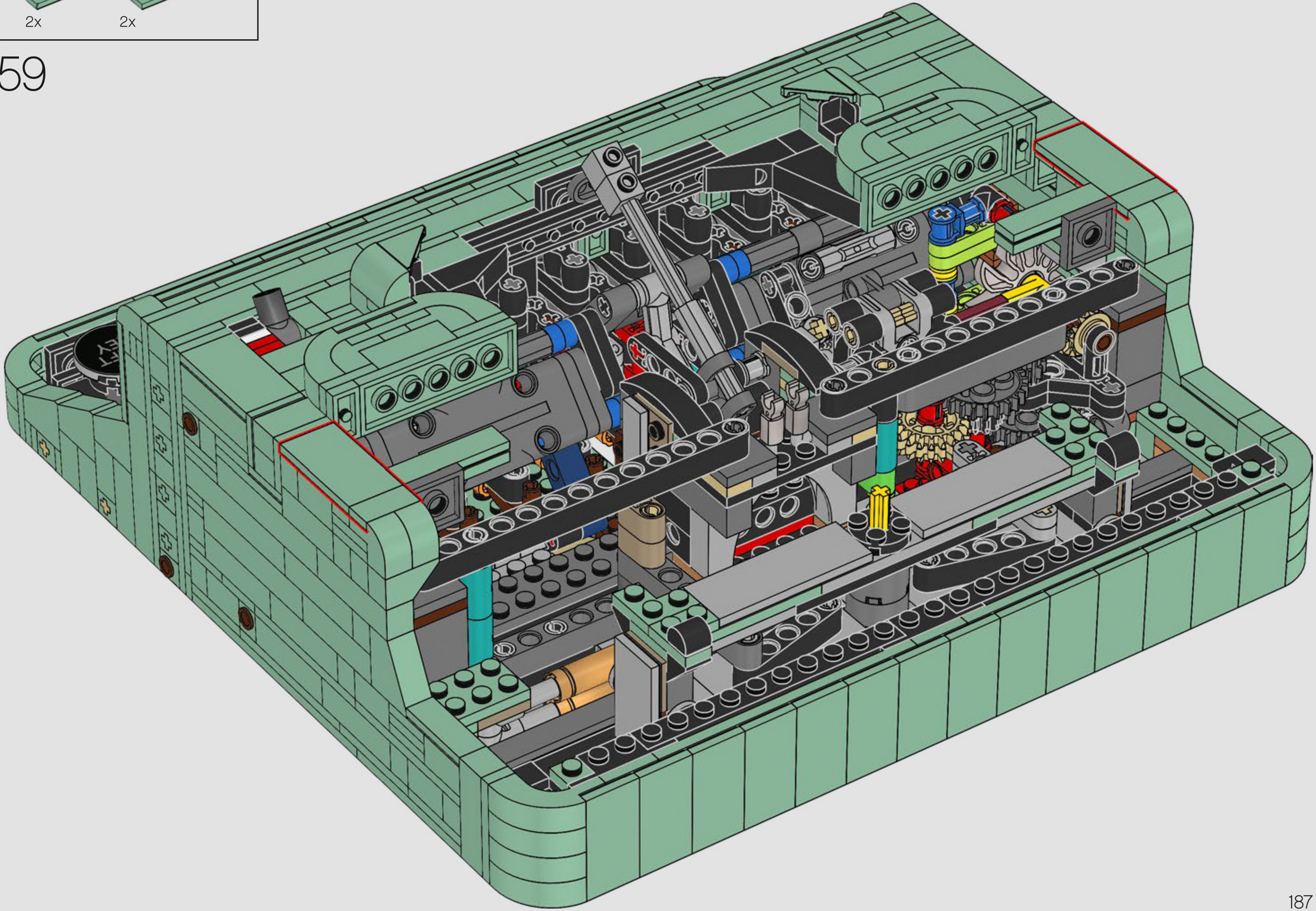

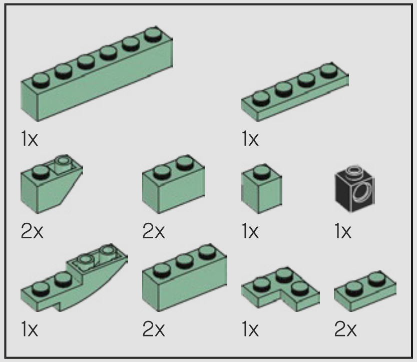
1x
1x
2x
2x
1x
1x
1x
2x
1x
2x

260

1

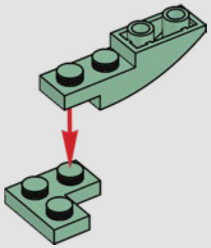

2

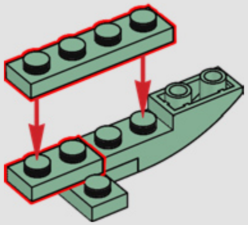

3

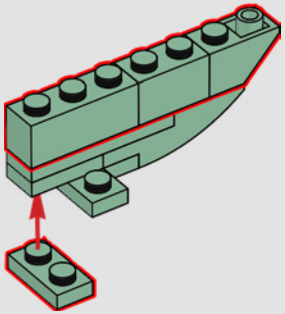

4

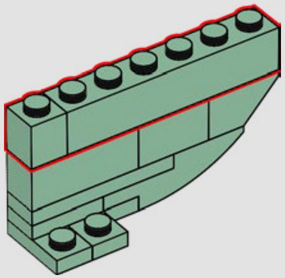

5

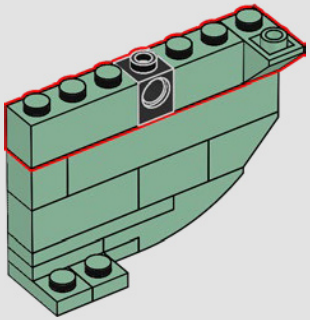

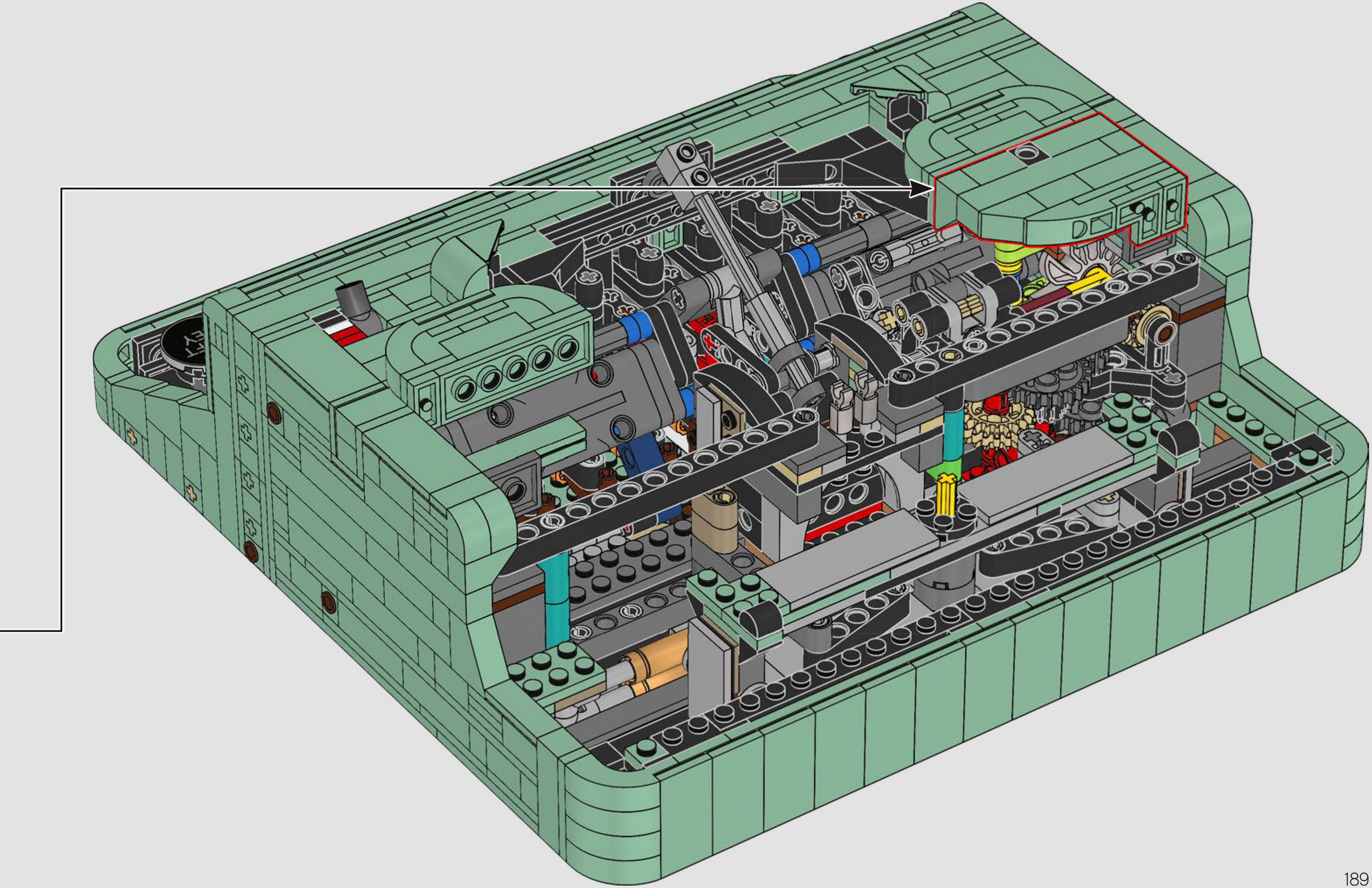

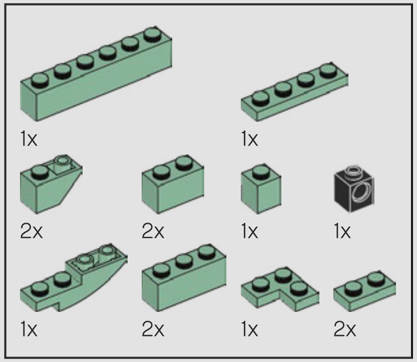
1x
1x
2x
2x
1x
1x
1x
2x
1x
2x

261

1

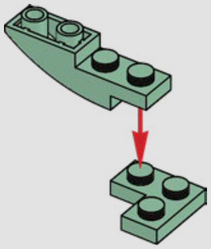

2

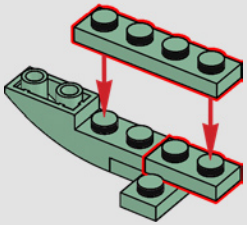

3

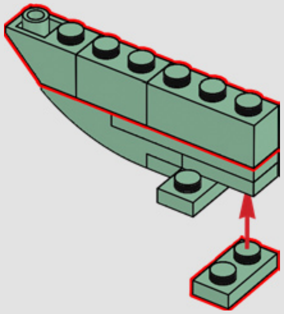

4

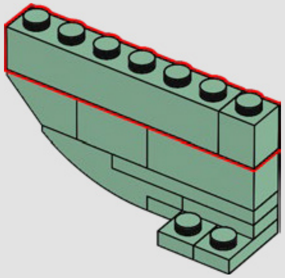

5

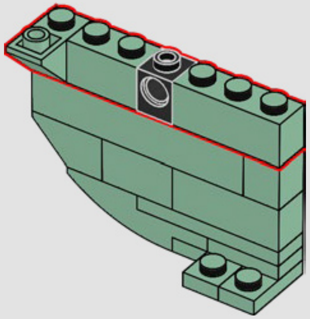

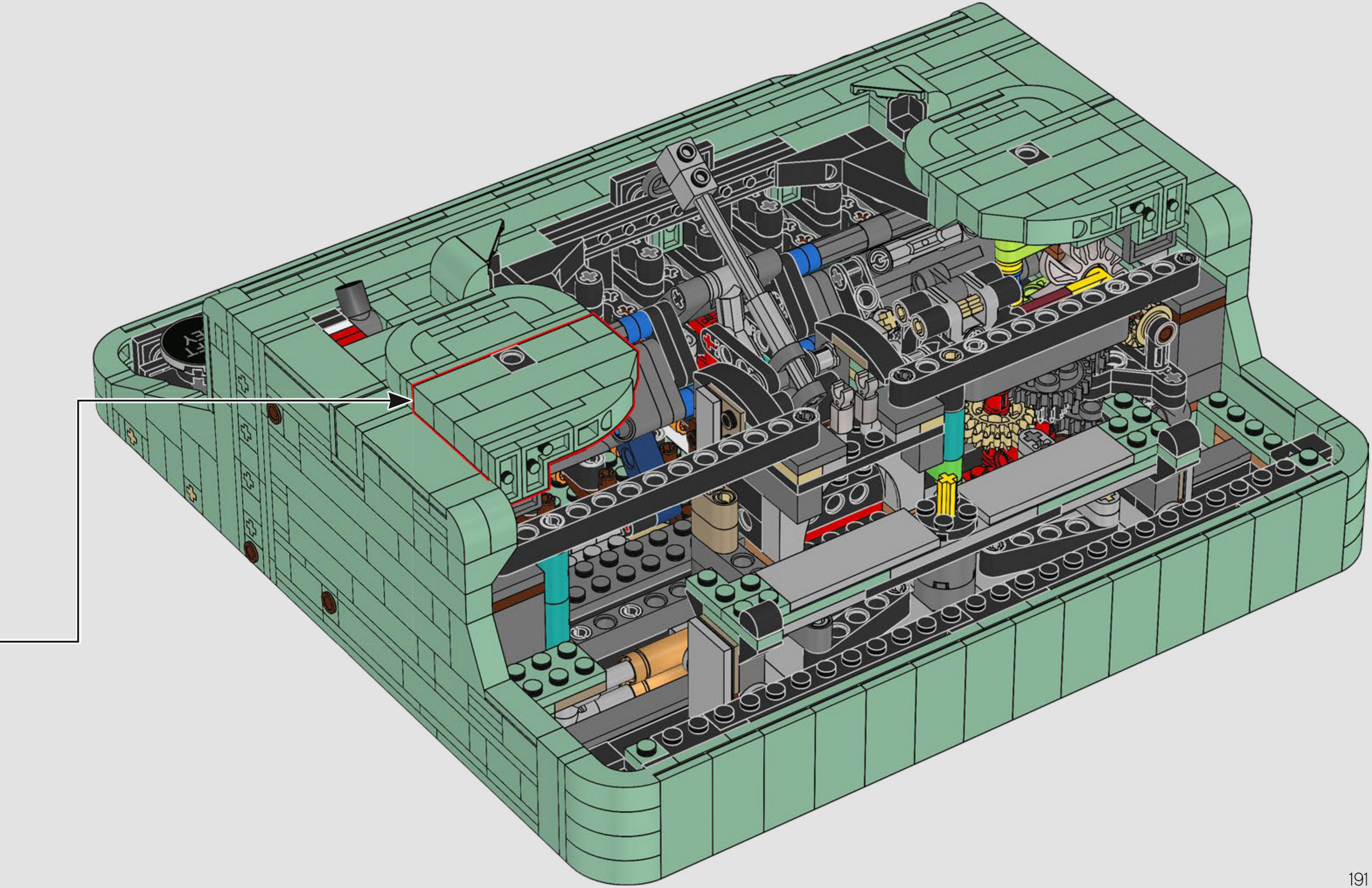

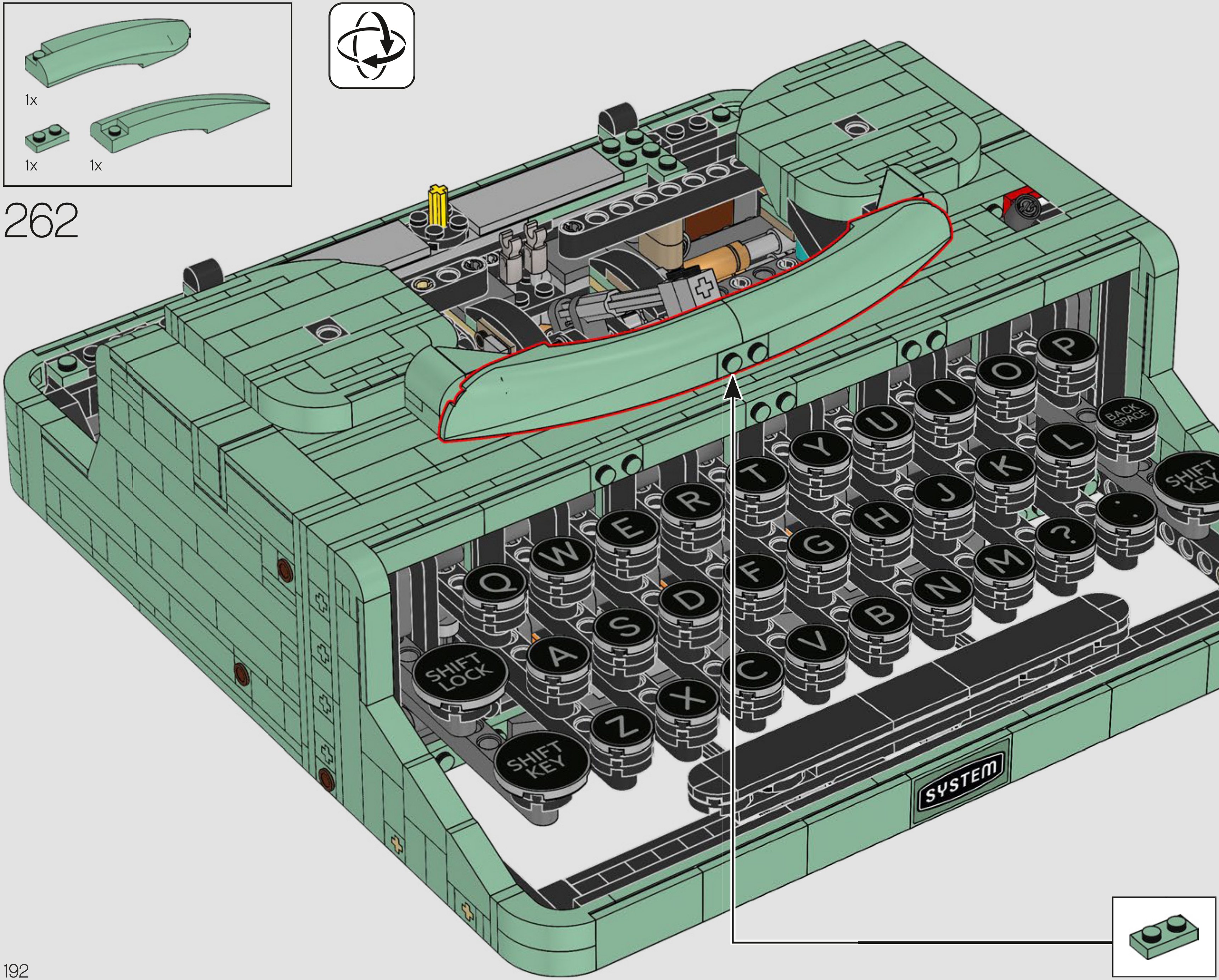
1x
1x
1x

262

SHIFT LOCK
SHIFT KEY
BACK SPACE
SHIFT KEY
SYSTEM
Q
W
E
R
T
Y
U
I
O
P
A
S
D
F
G
H
J
K
L
Z
X
C
V
B
N
M
?

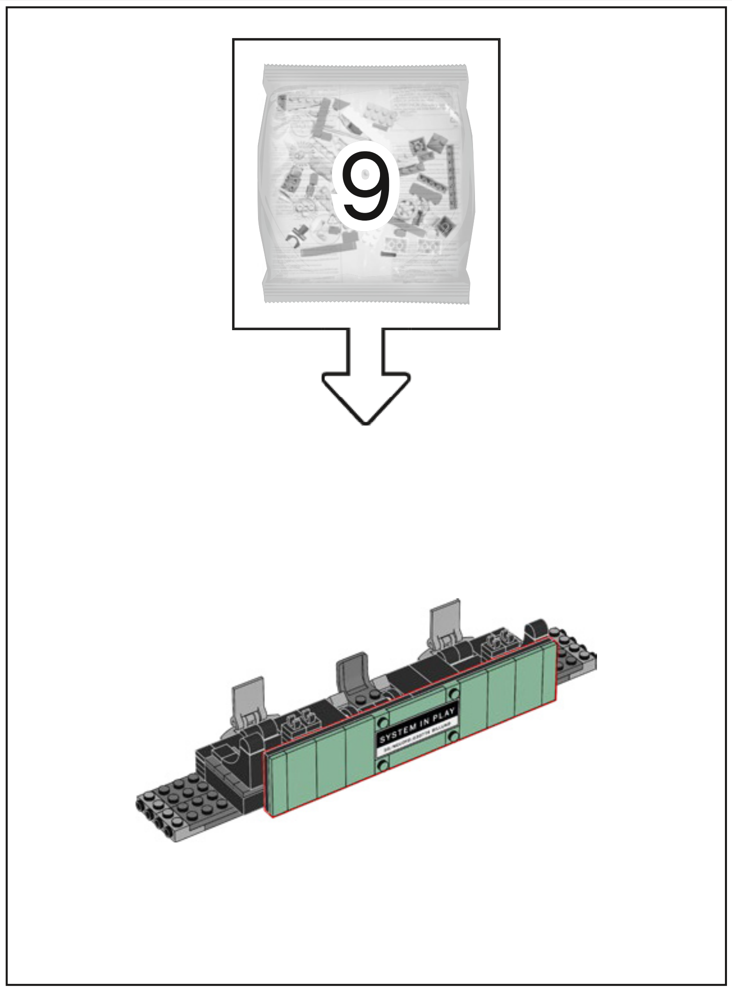
9
SYSTEM IN PLAY

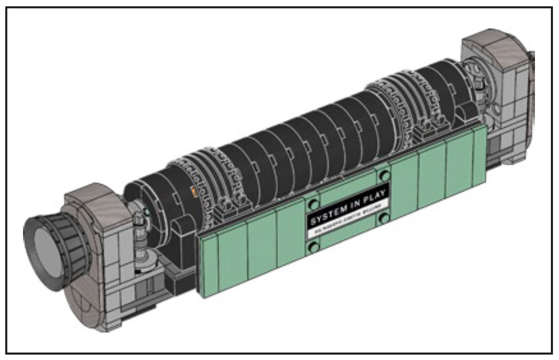
SYSTEM IN PLAY

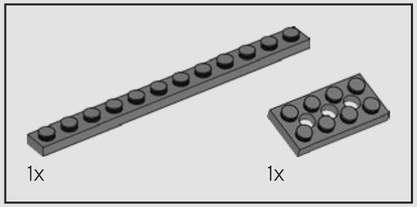

263

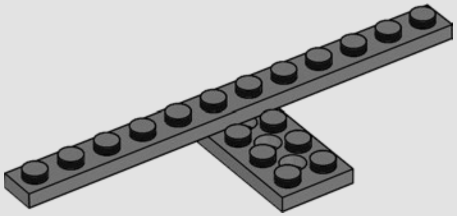

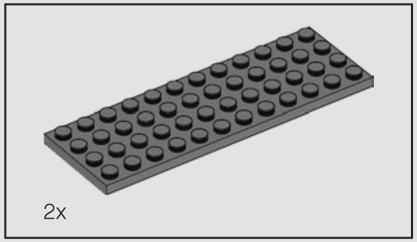

264

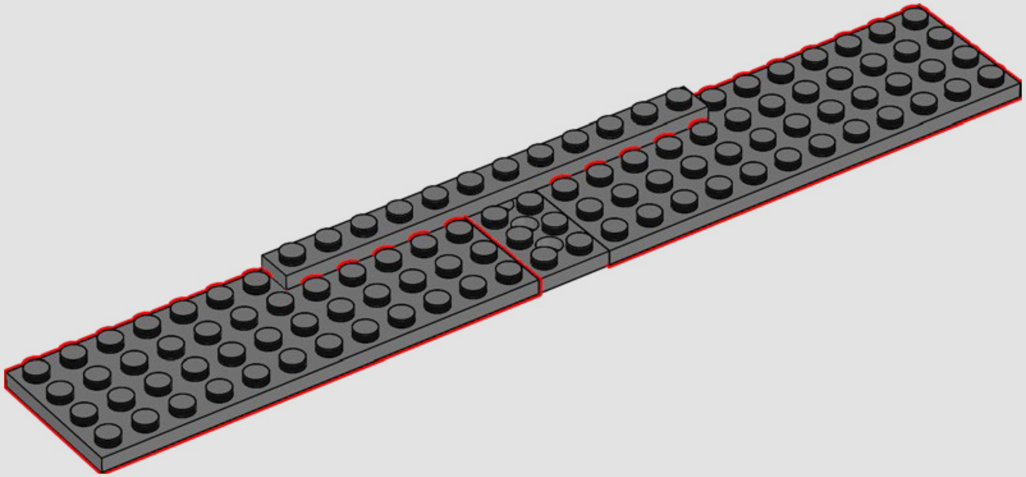

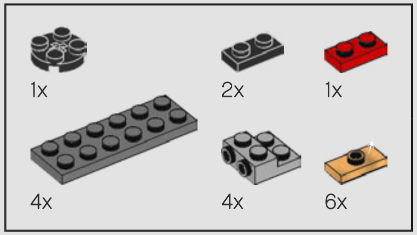
1x
2x
1x
4x
4x
6x

265

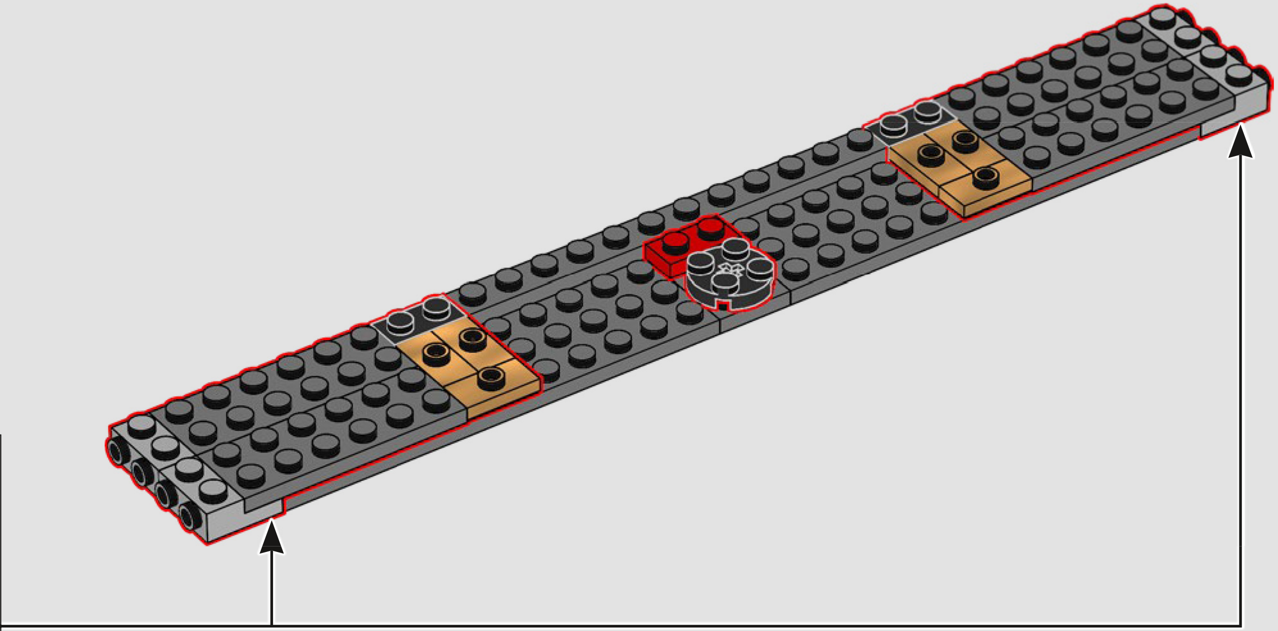

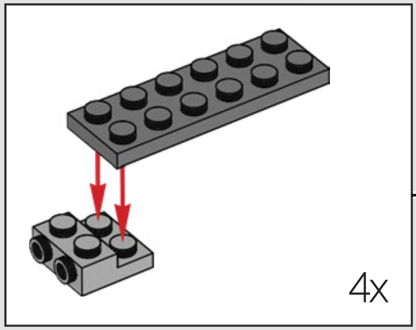

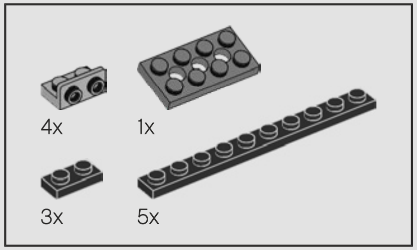

266

1

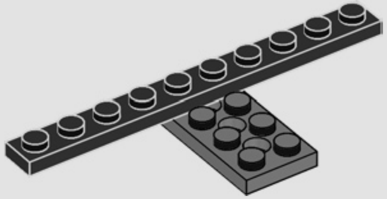

2

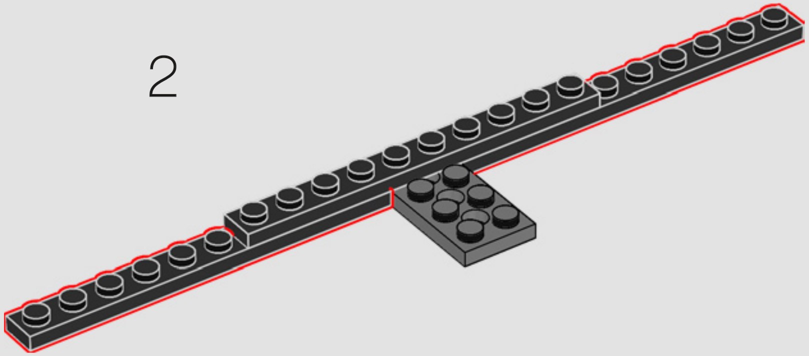

3

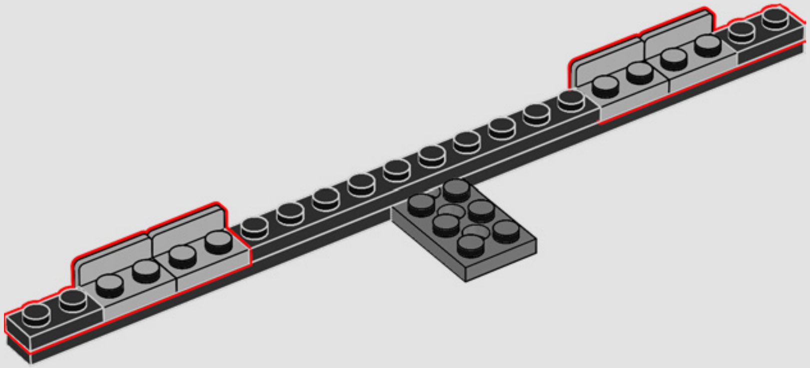

4

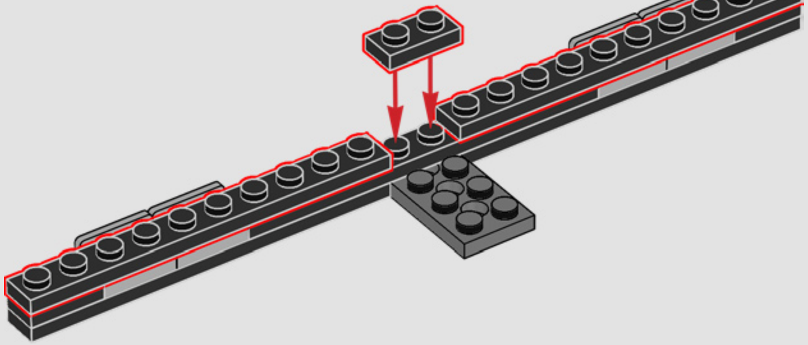

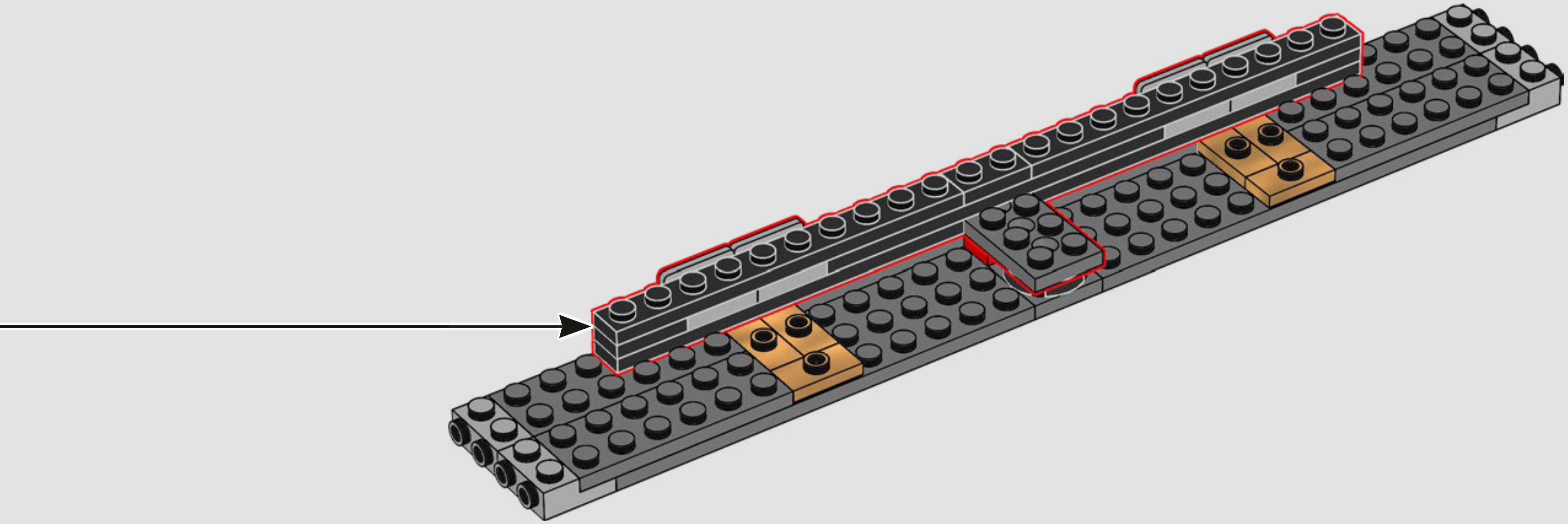

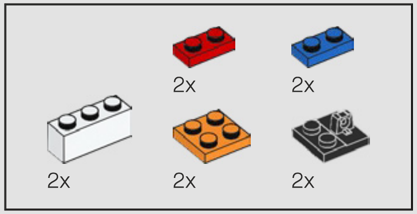
2x
2x
2x
2x
2x
2x

267

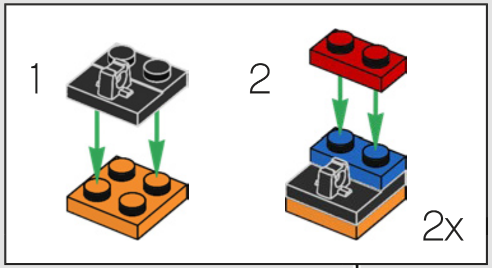

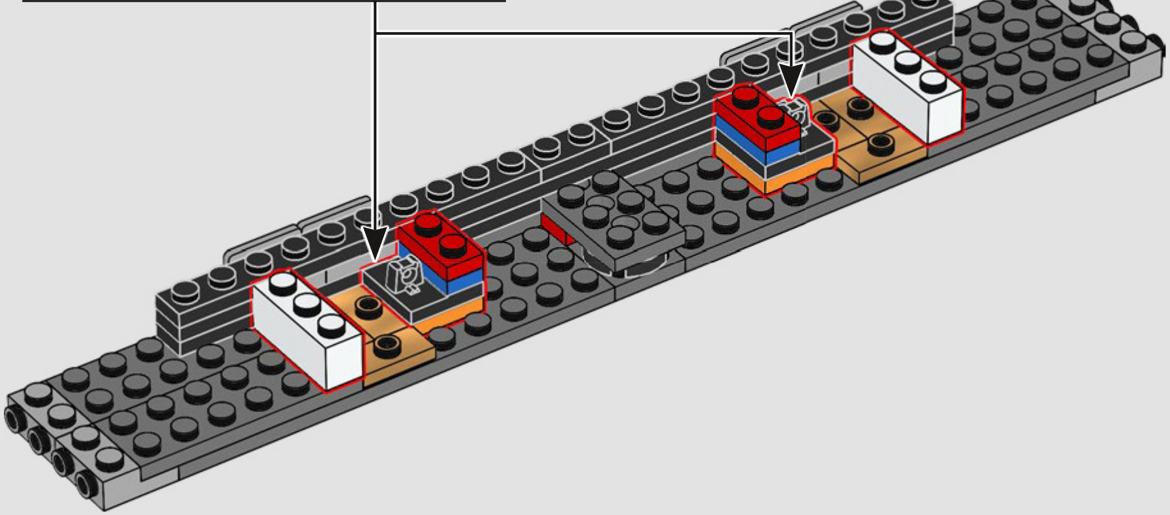

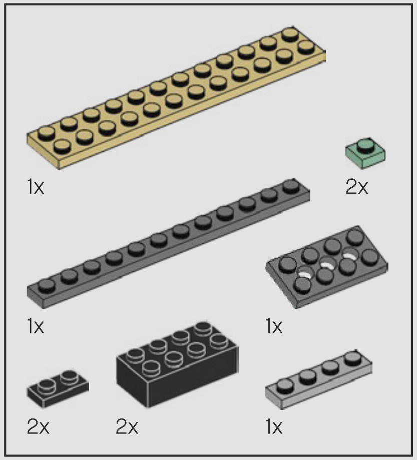
1x
2x
1x
1x
2x
2x
1x

268

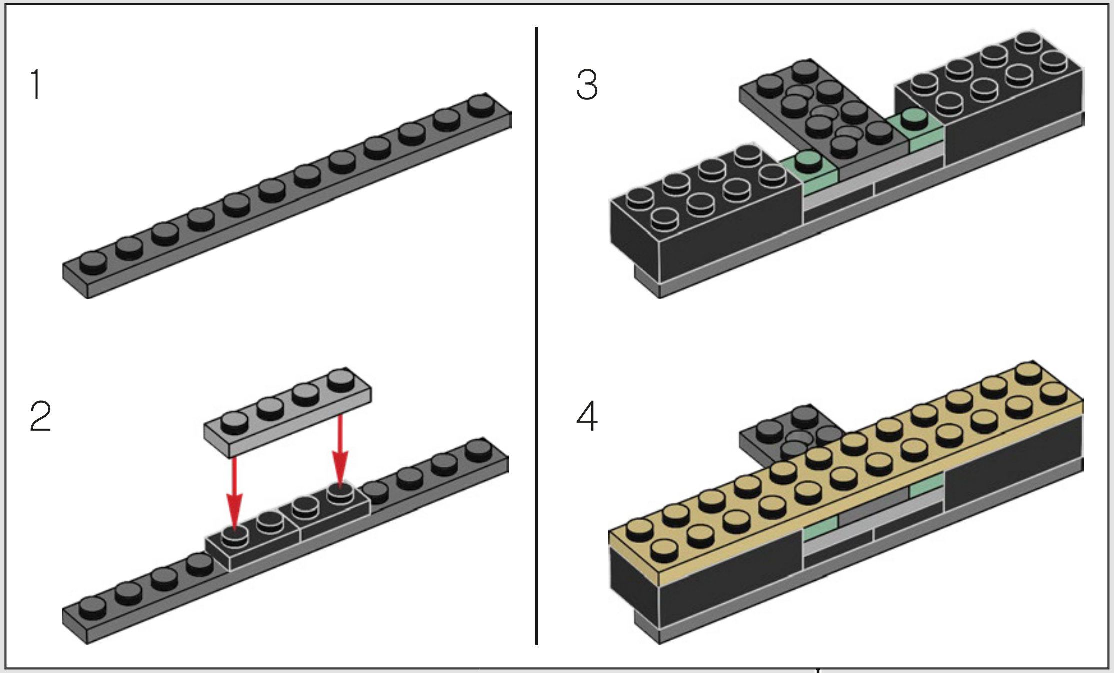

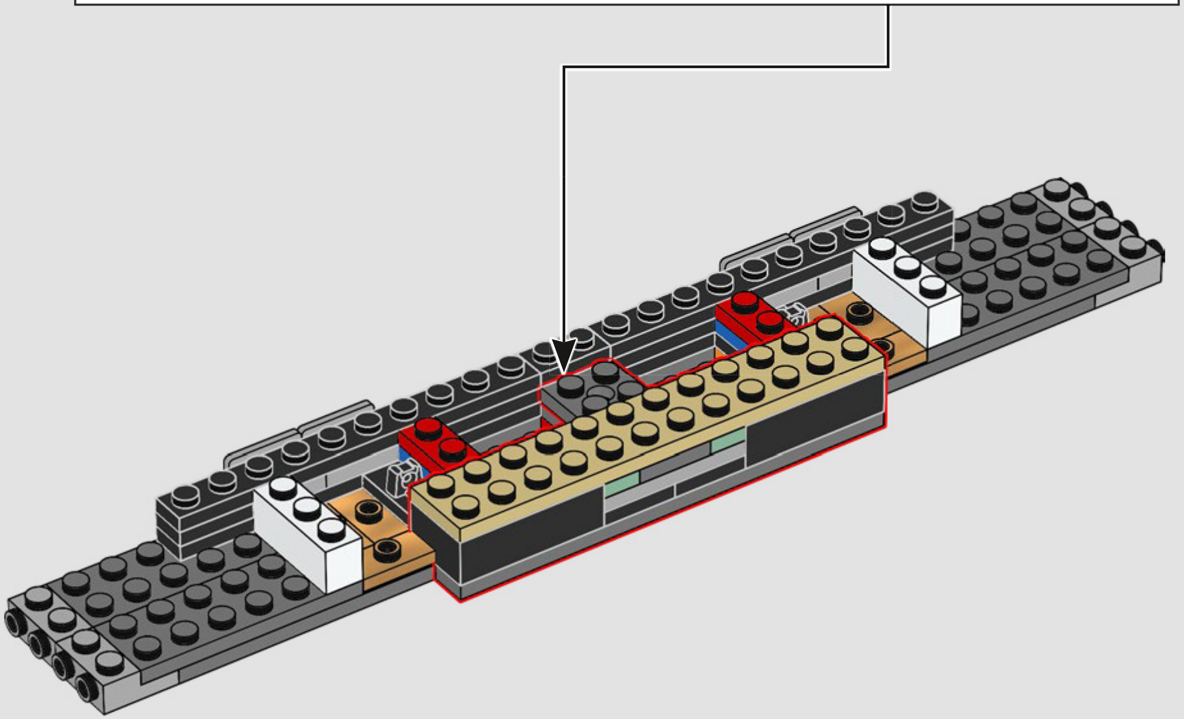

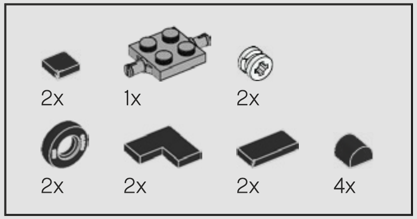
2x
1x
2x
2x
2x
2x
4x

269

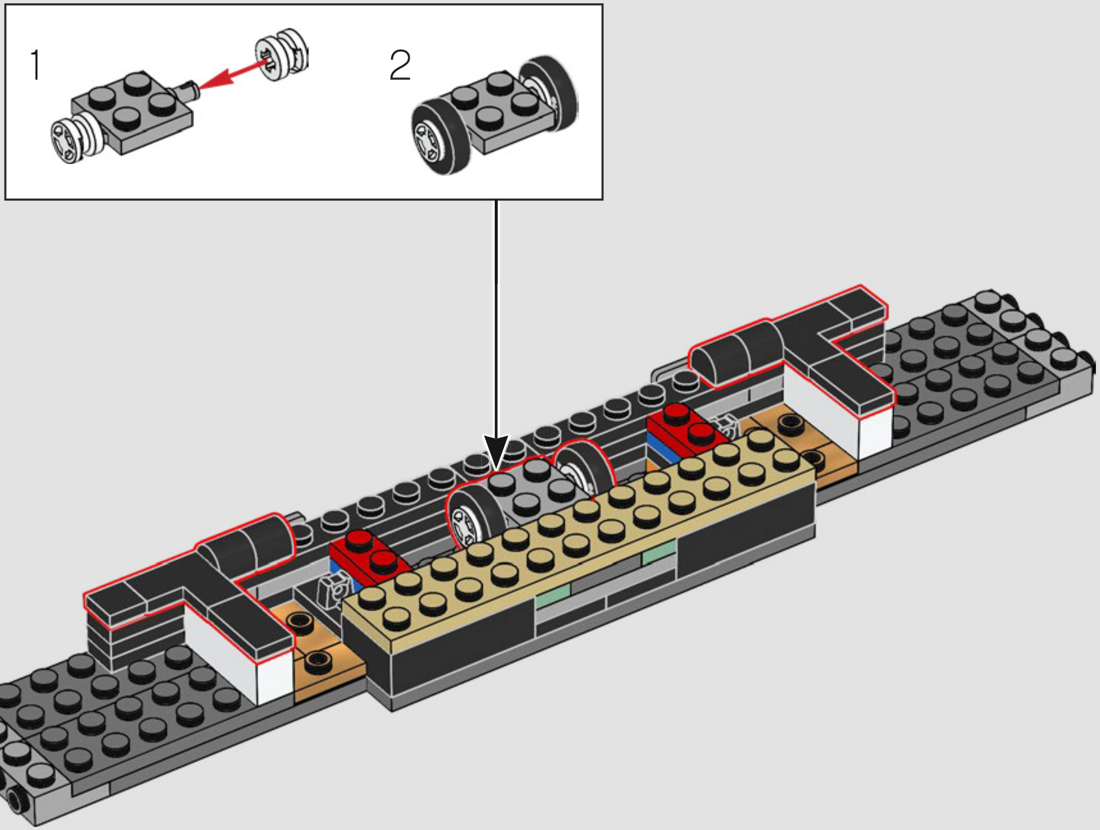

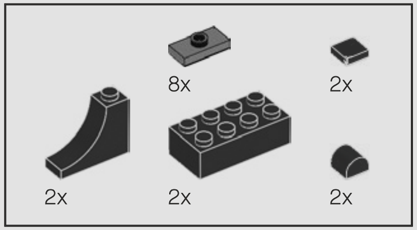
8x
2x
2x
2x
2x

270

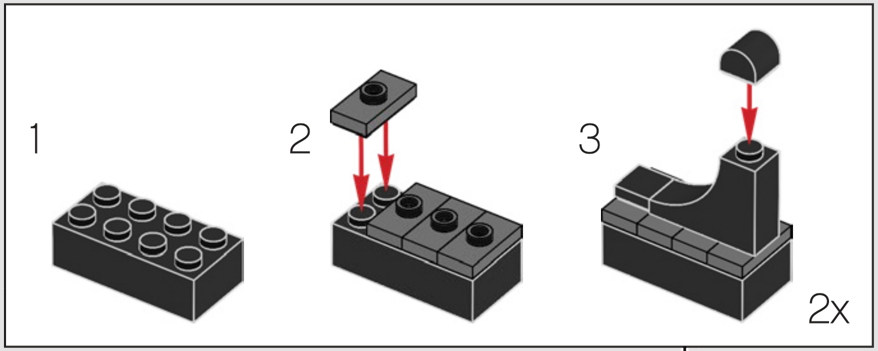

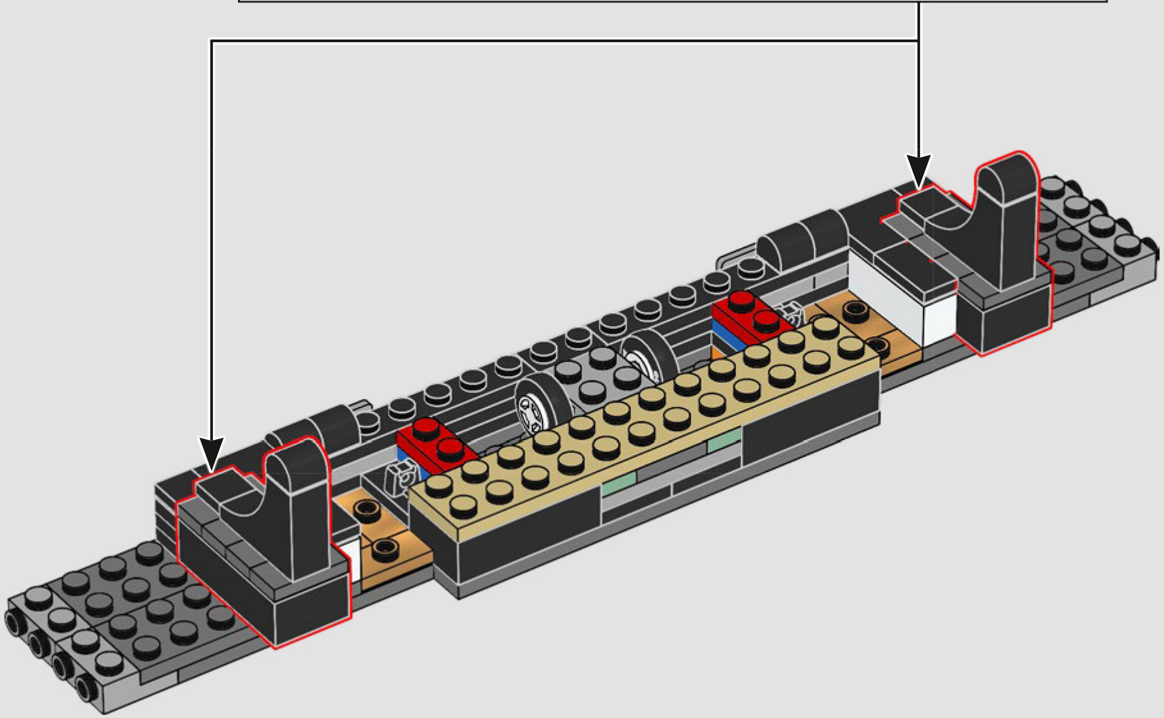

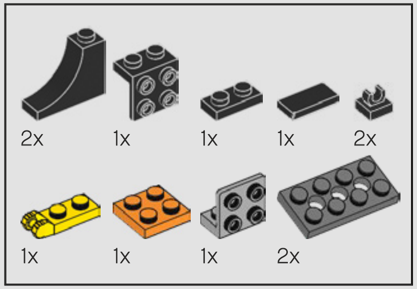
2x
1x
1x
1x
2x
1x
1x
1x
2x

271

1

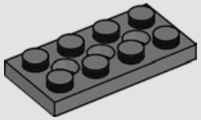

2

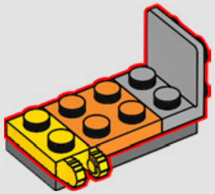

3

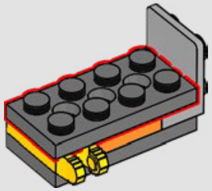

4

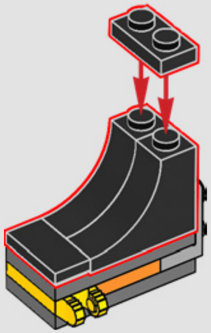

5

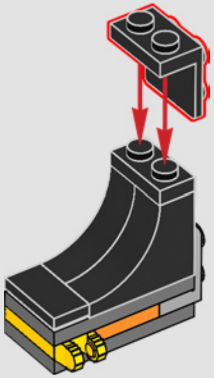

6

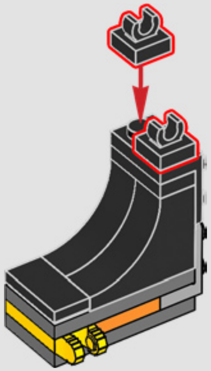

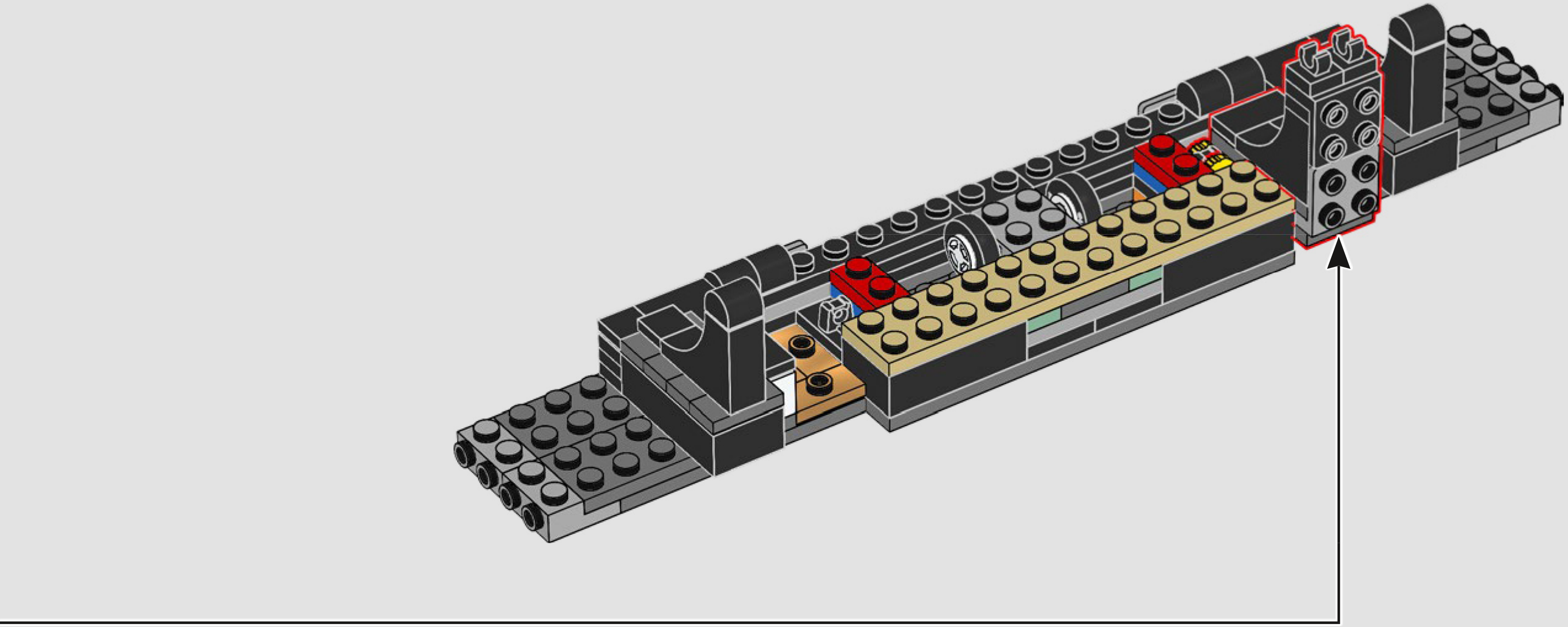

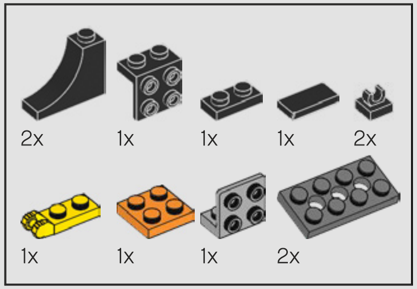
2x
1x
1x
1x
2x
1x
1x
1x
2x

272

1

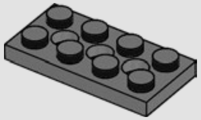

2

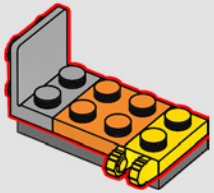

3

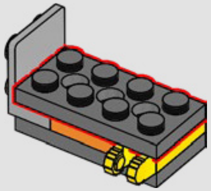

4

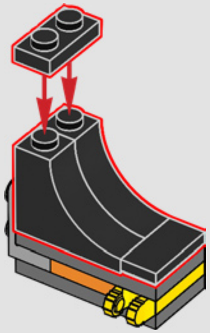

5

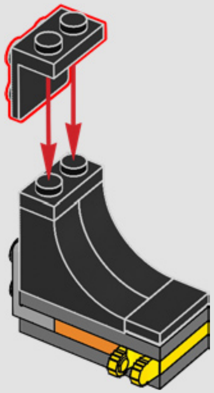

6

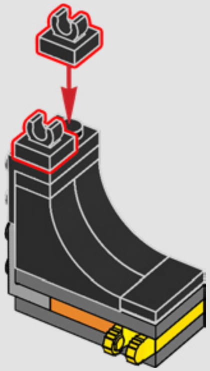

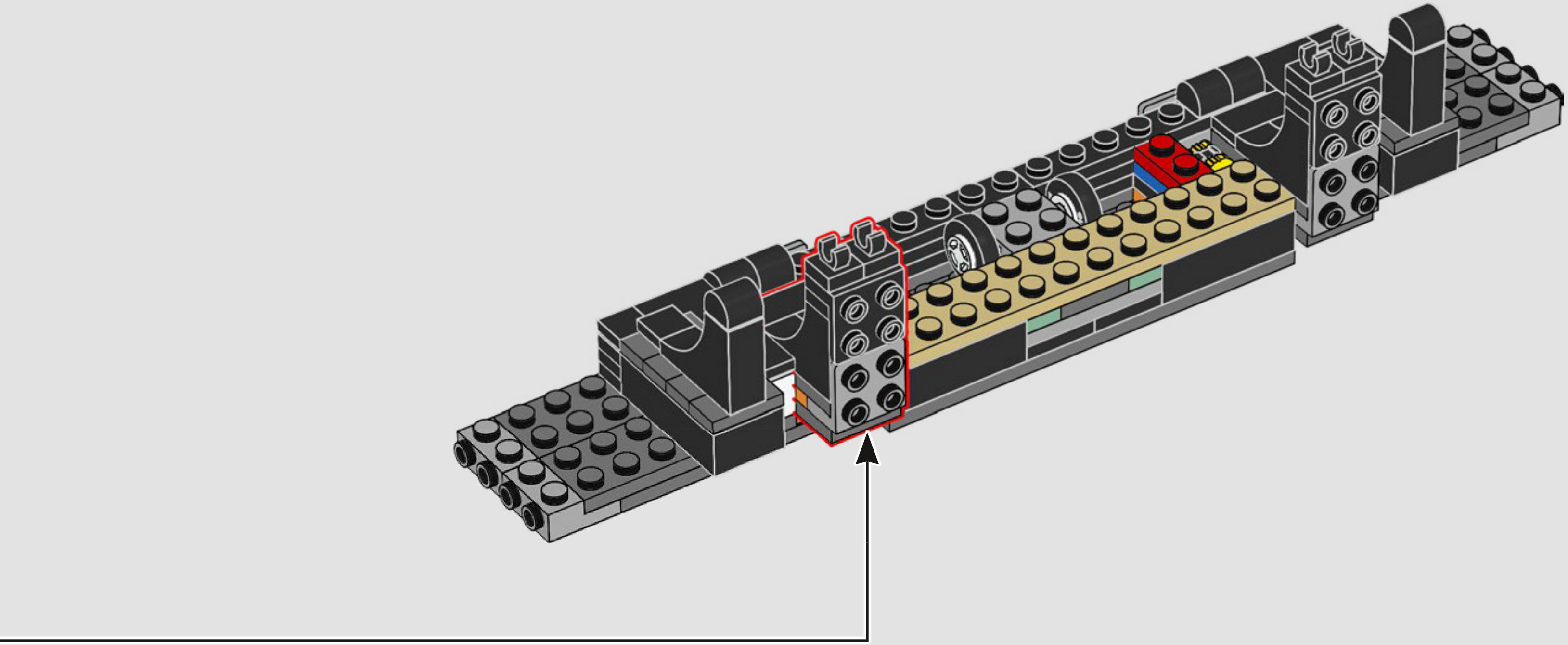

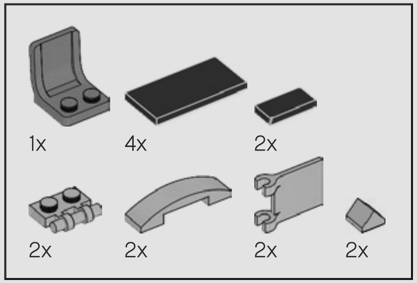
1x
4x
2x
2x
2x
2x
2x

273

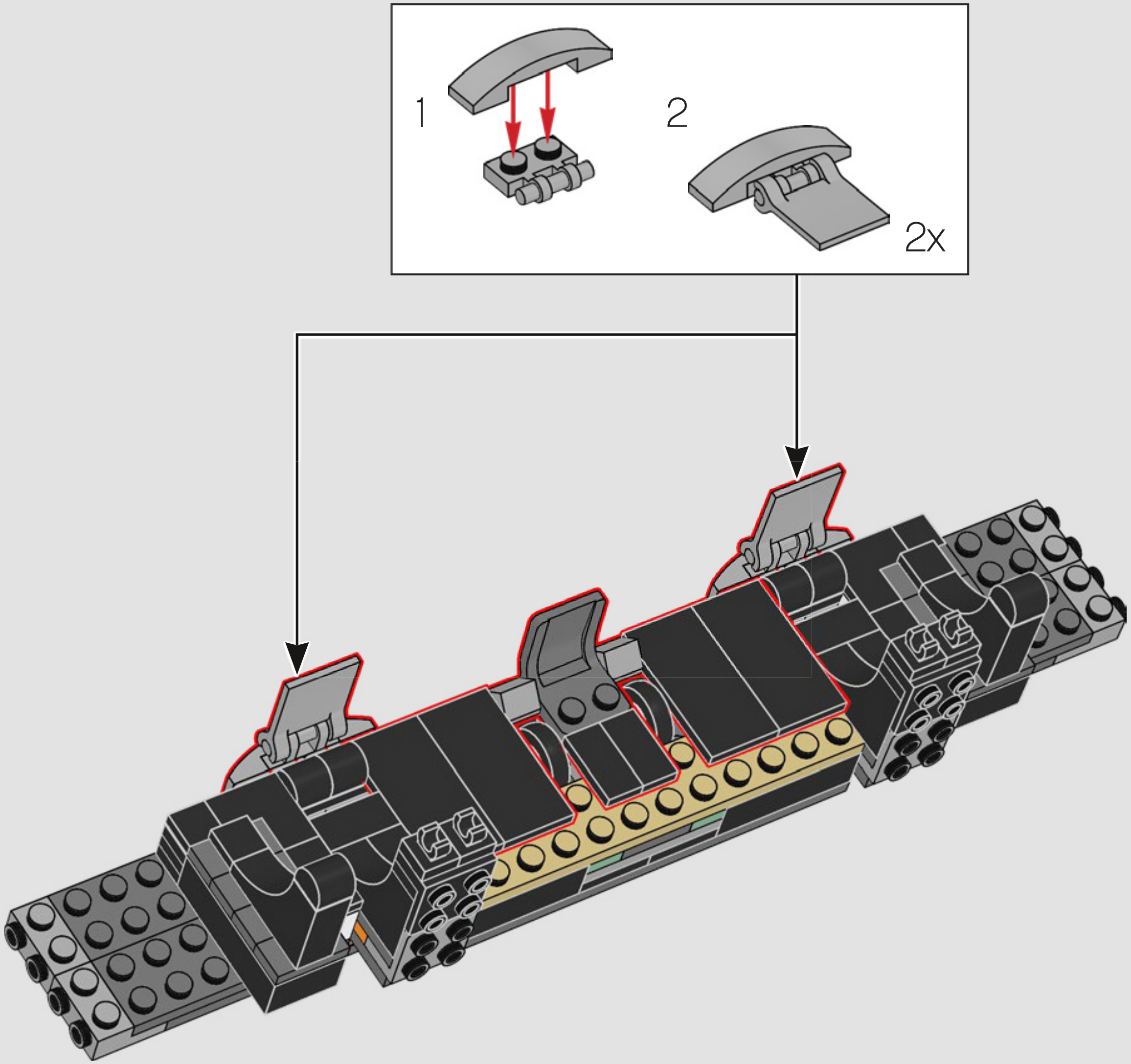

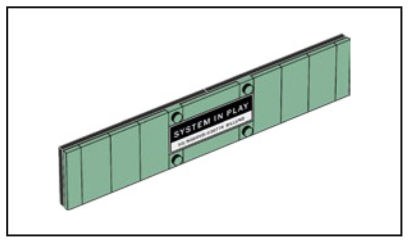
SYSTEM IN PLAY

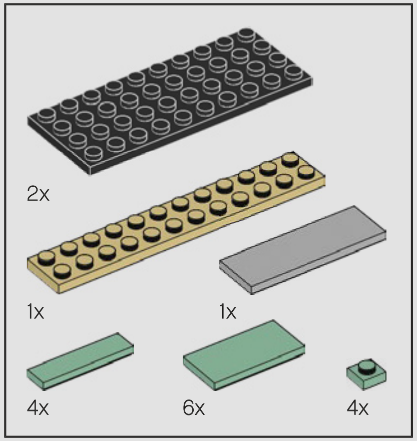
2x
1x
1x
4x
6x
4x

274

1

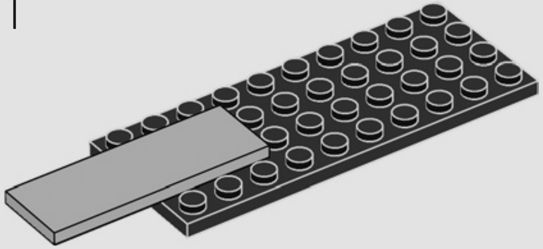

2

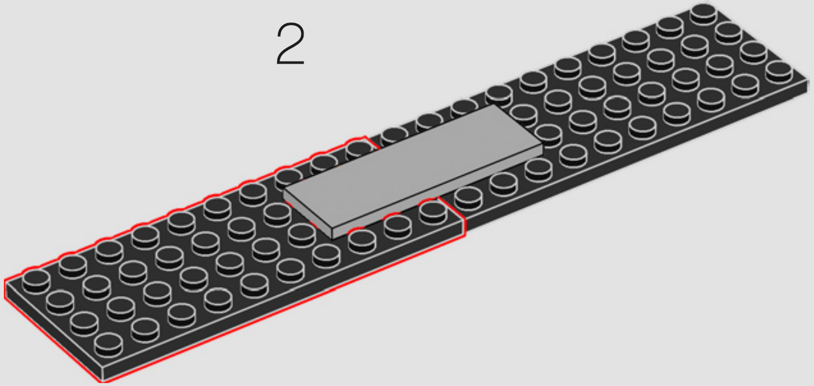

3

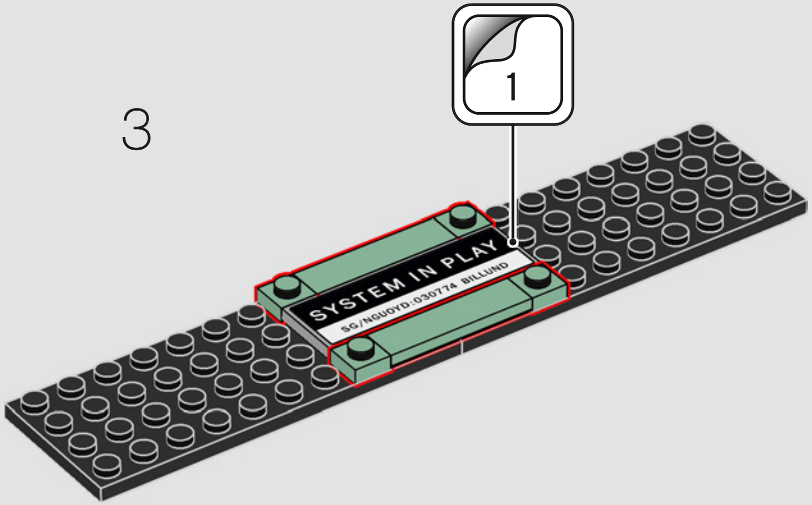
1
SYSTEM IN PLAY
SG/NGUOYD:030774 BILLUND

4

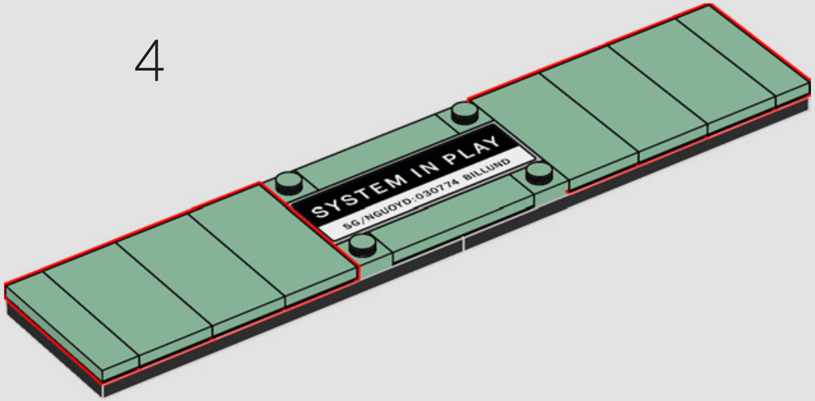
SYSTEM IN PLAY
SG/NGUOYD:030774 BILLUND

5

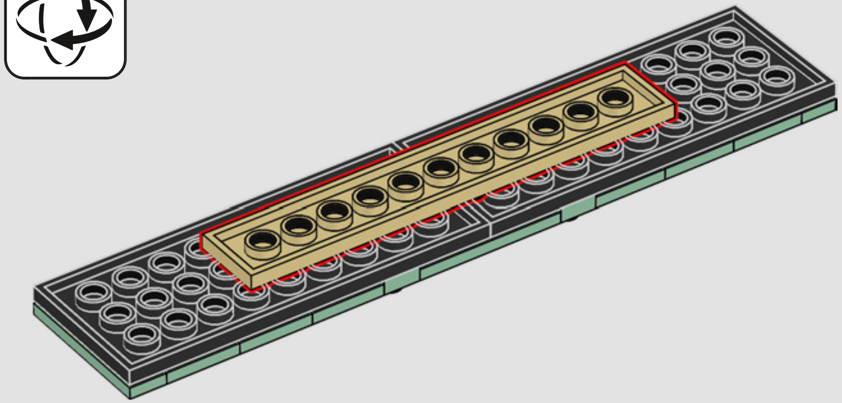

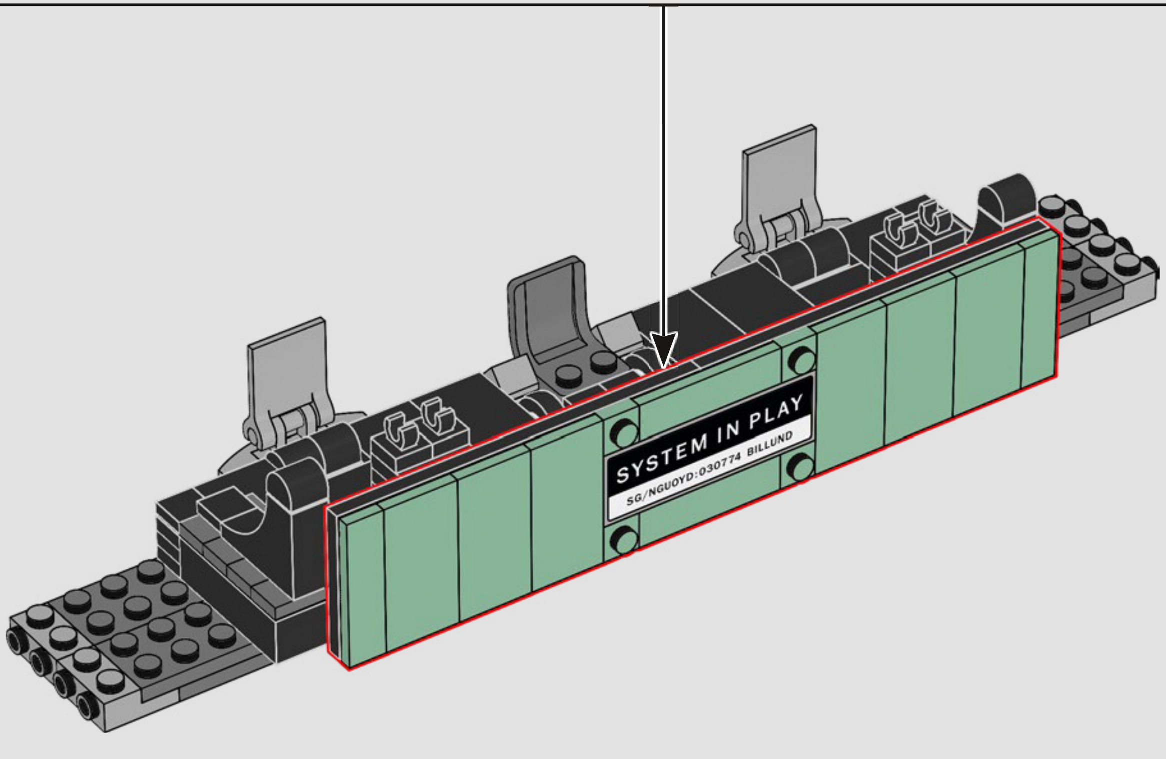
SYSTEM IN PLAY
SG/NGUOYD:030774 BILLUND

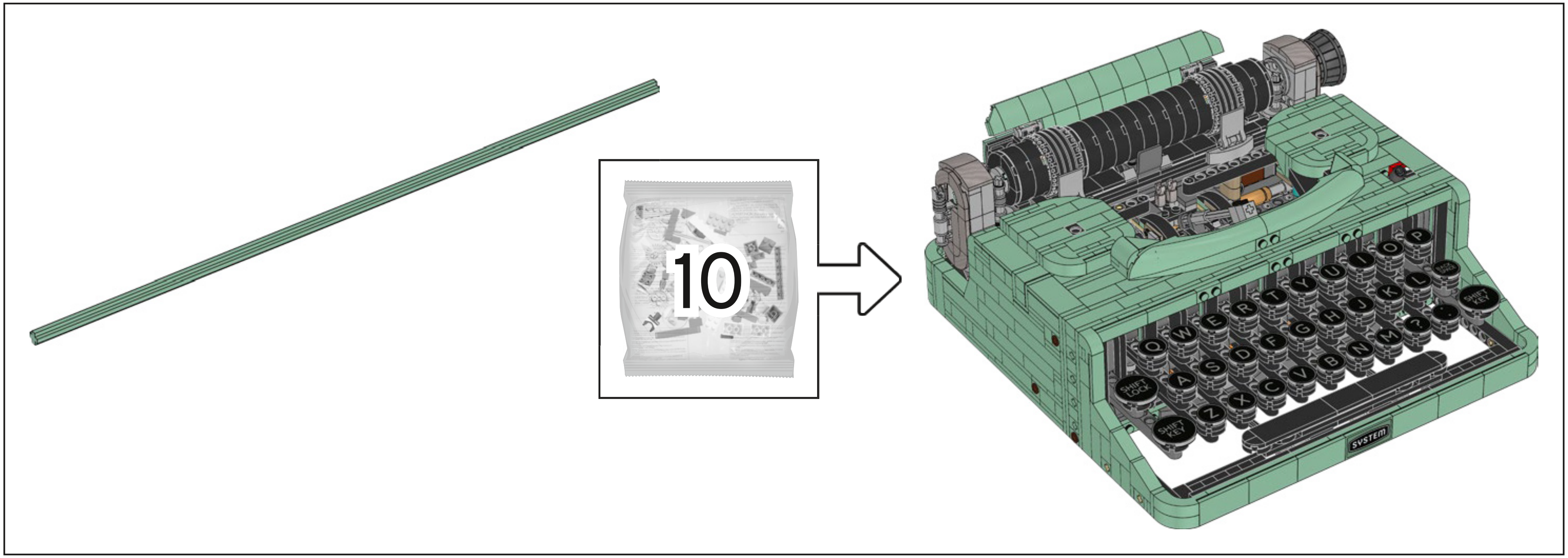

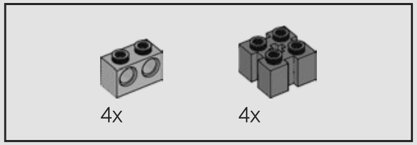

275

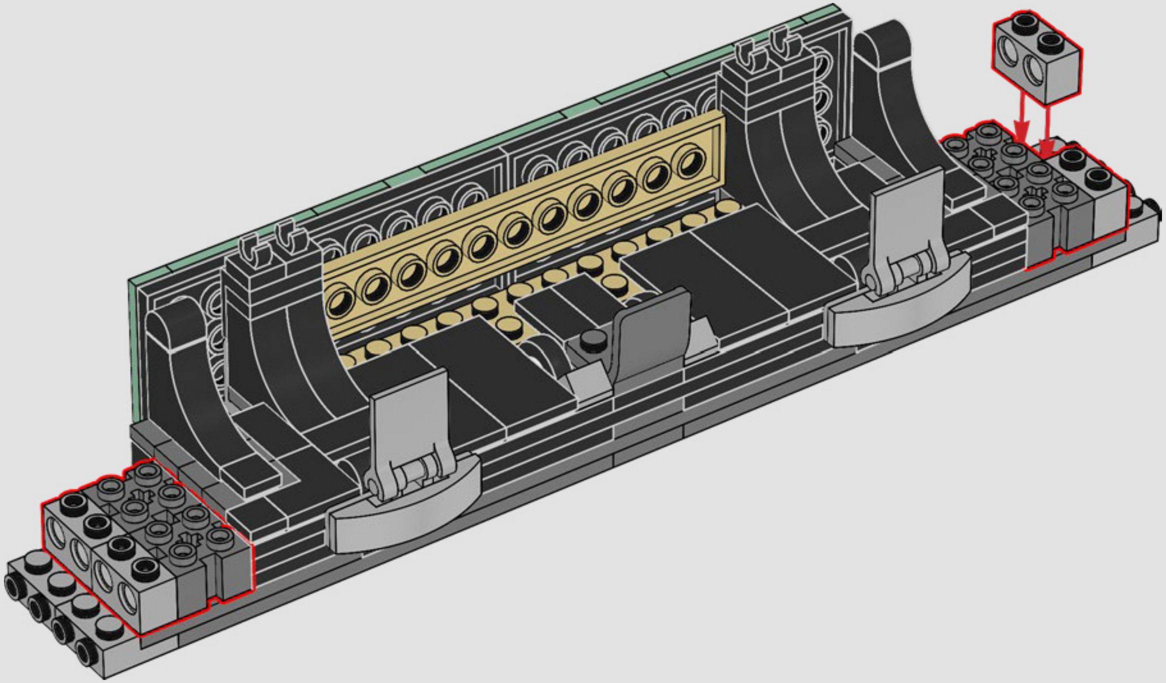

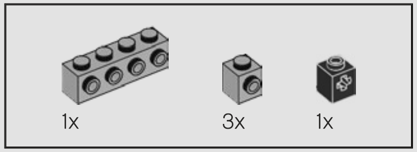

276

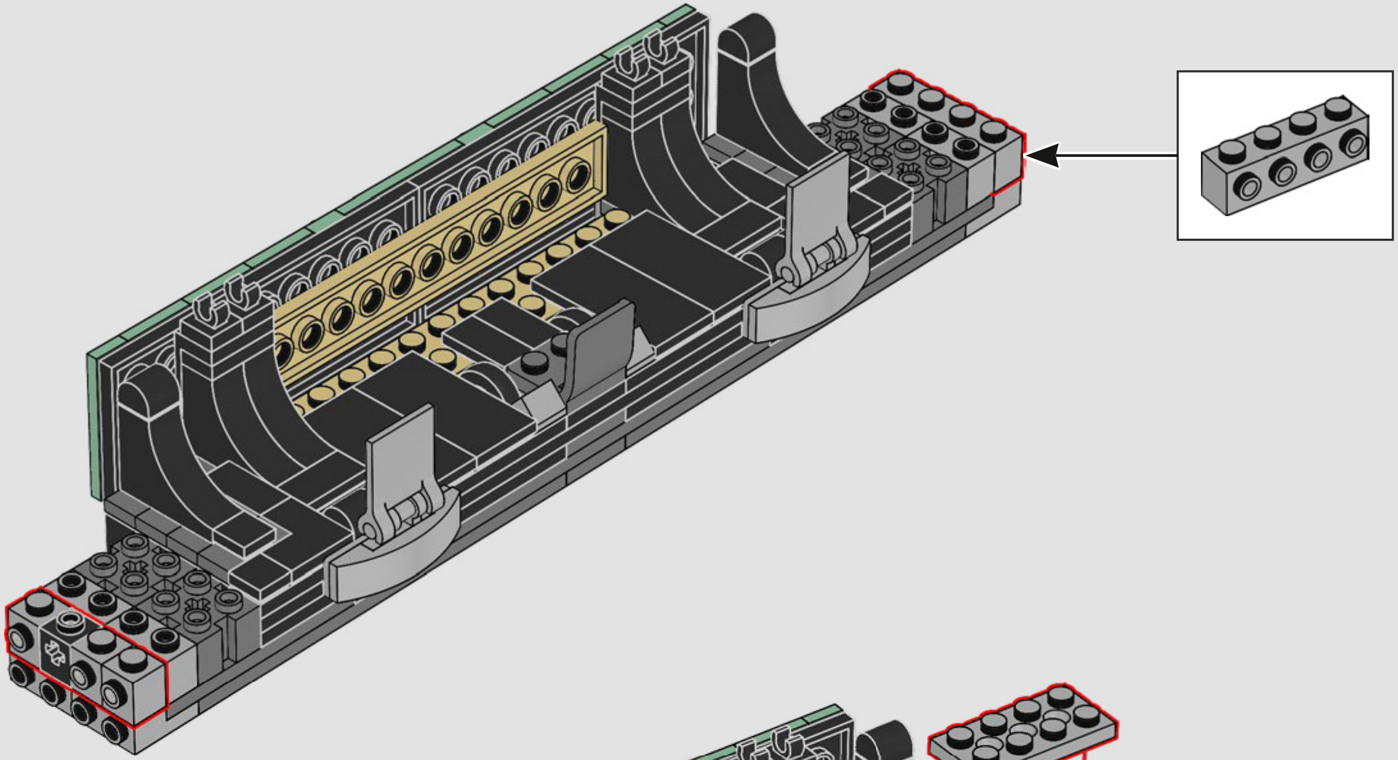

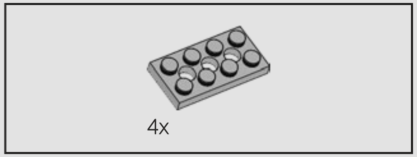

277

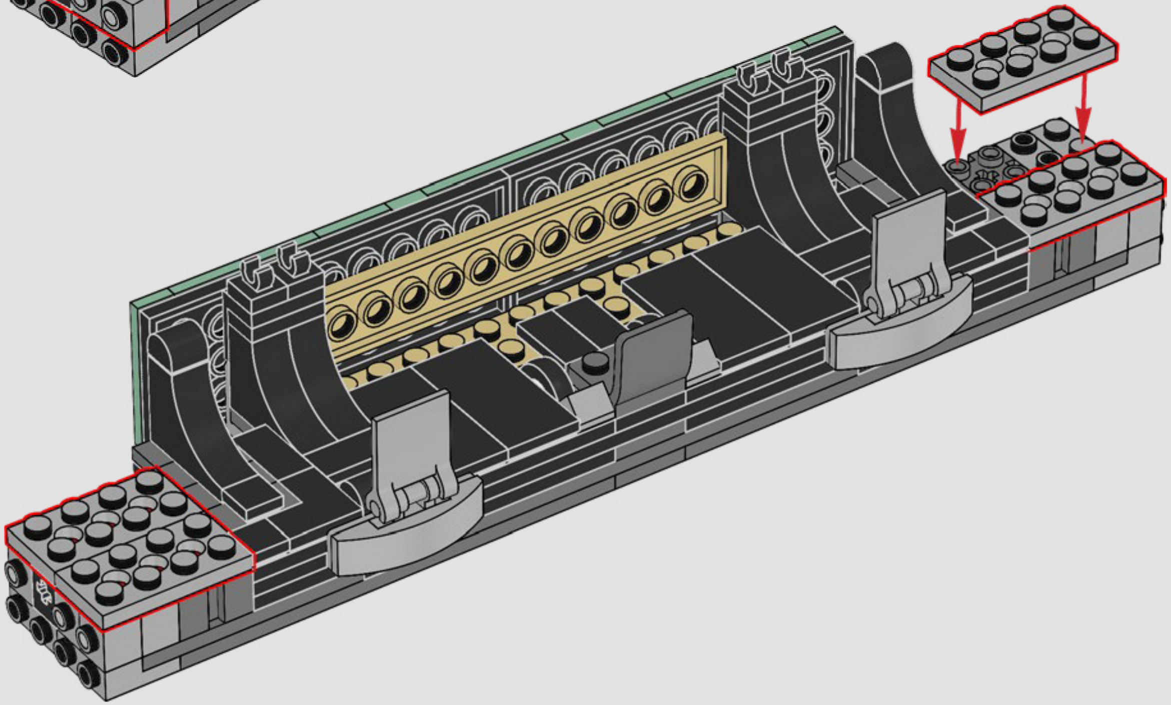

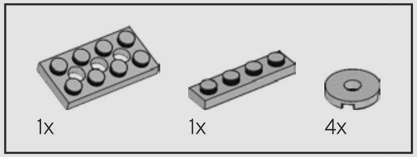

278

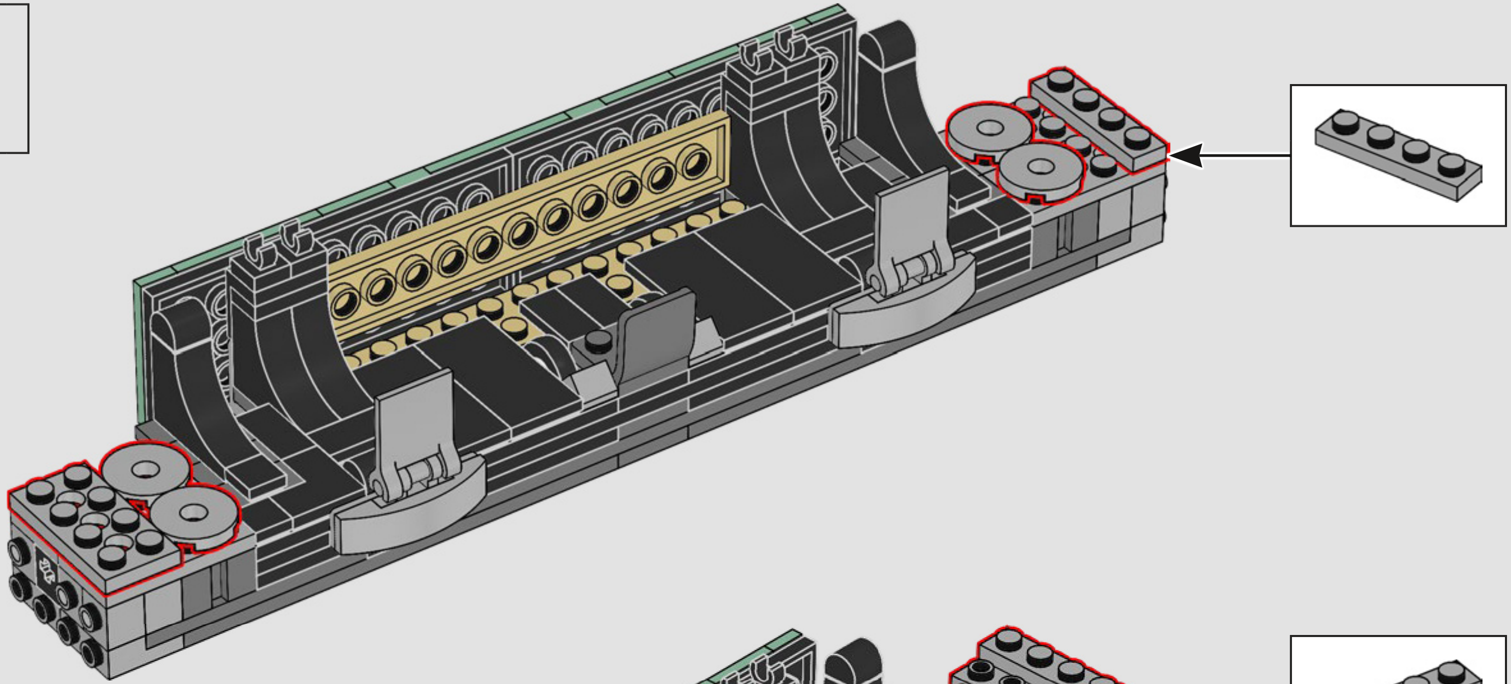

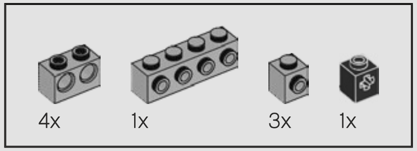

279

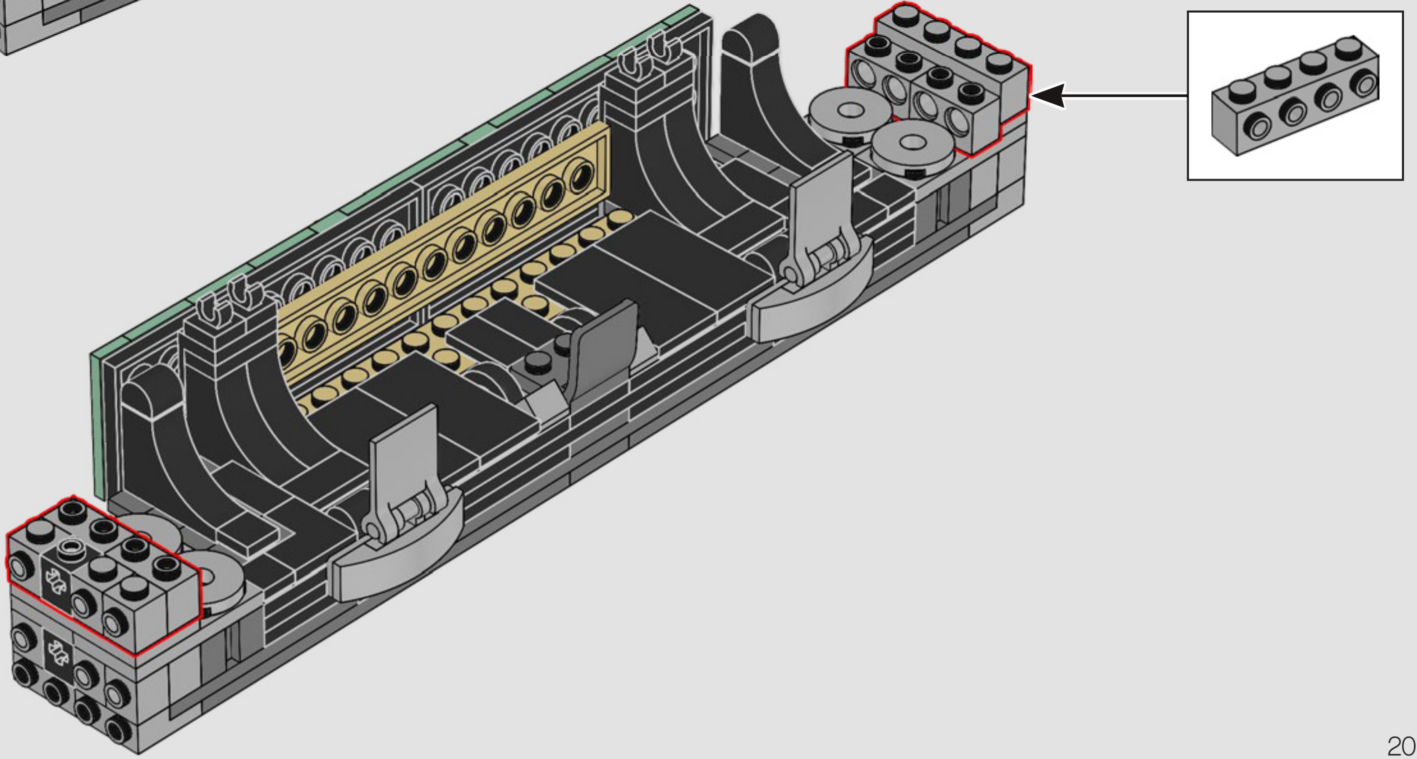

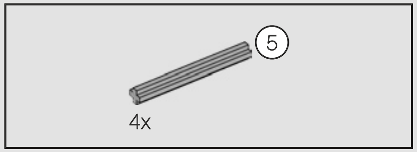

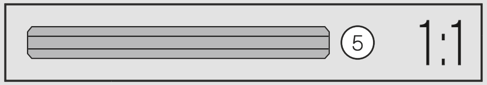

280

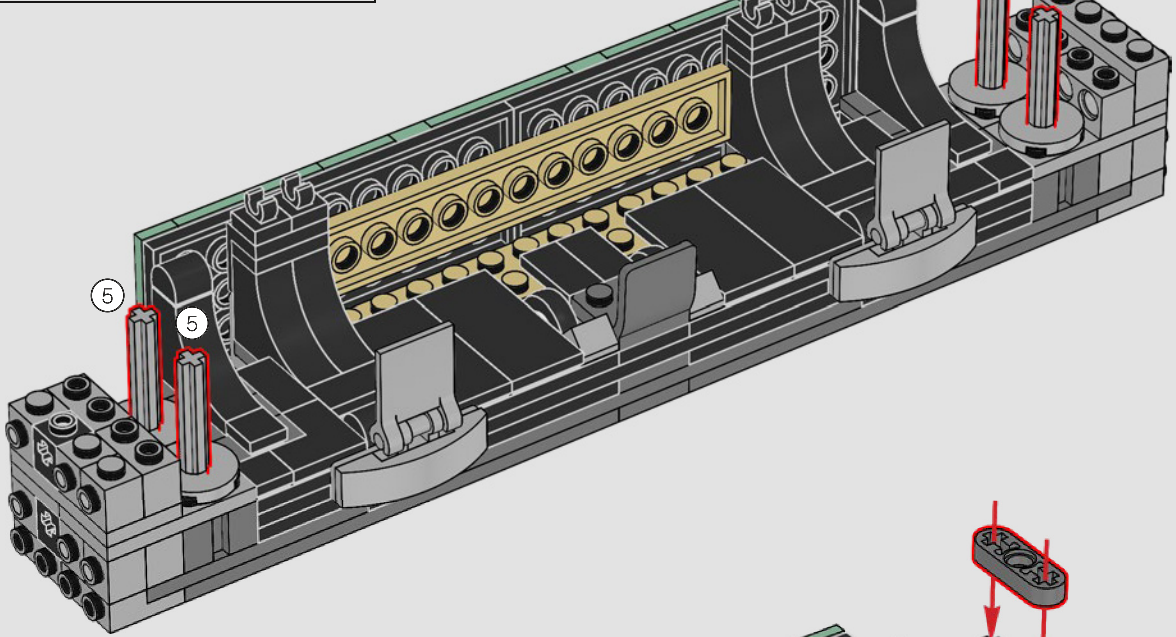

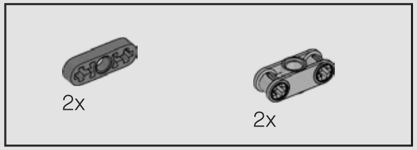

281

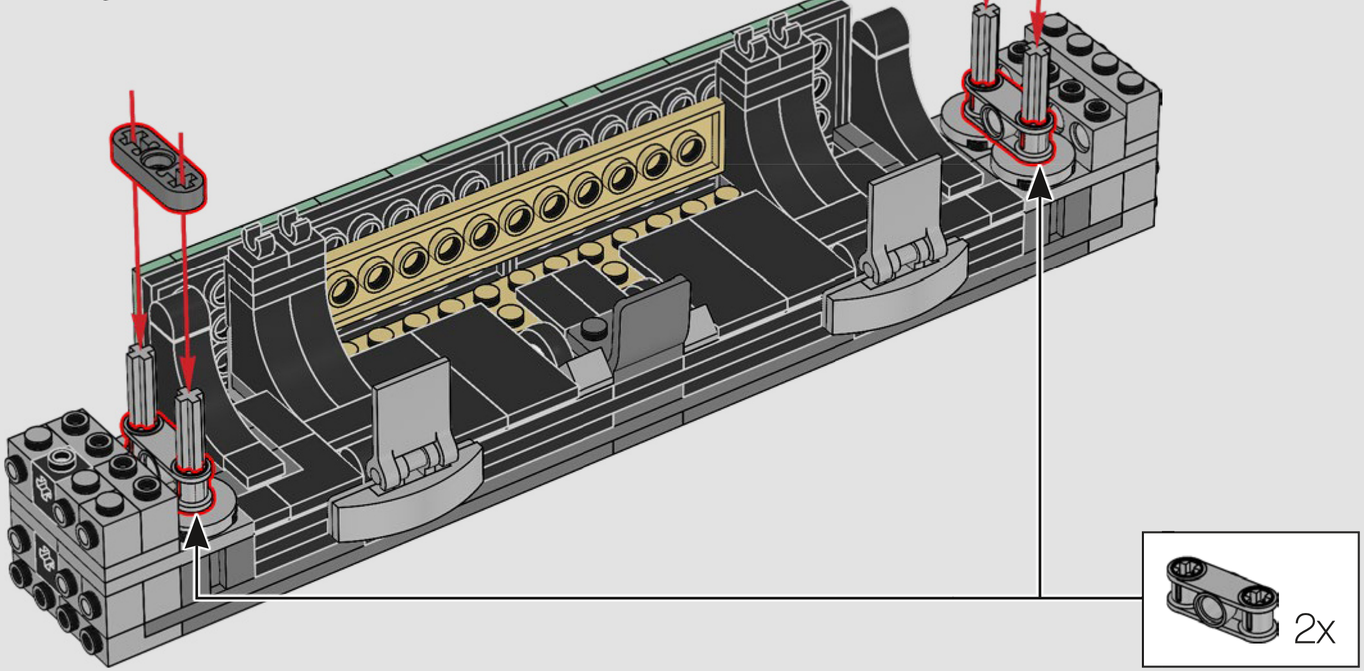

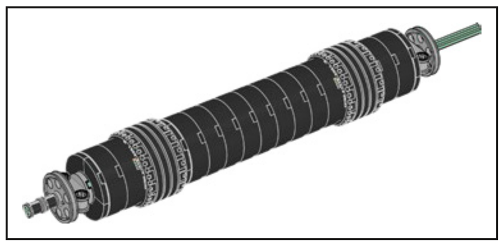

2x

282

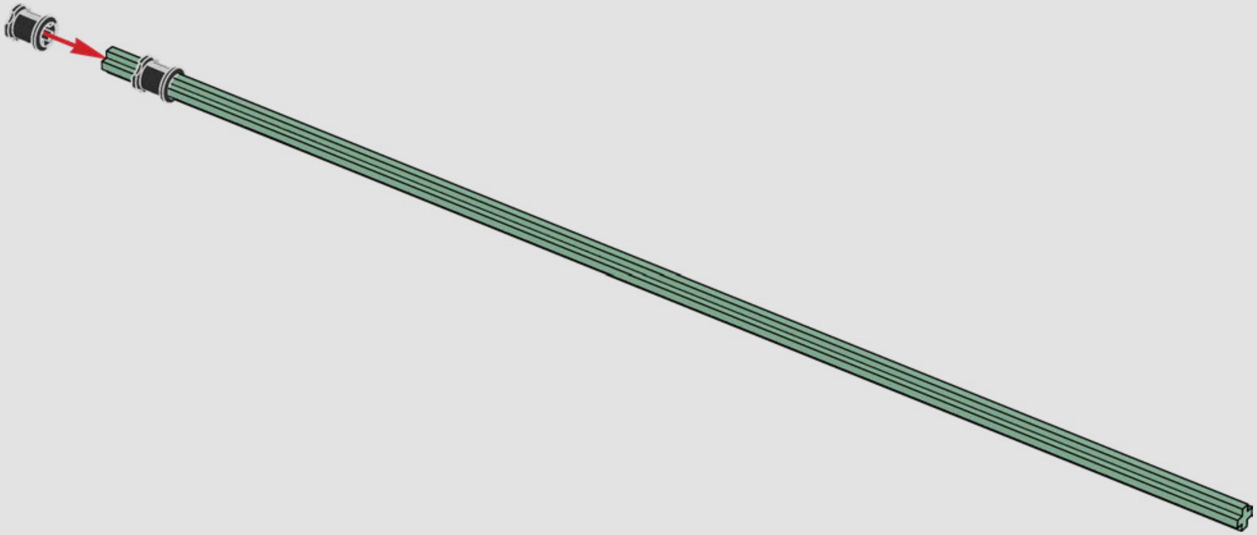

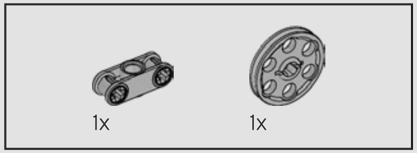

283

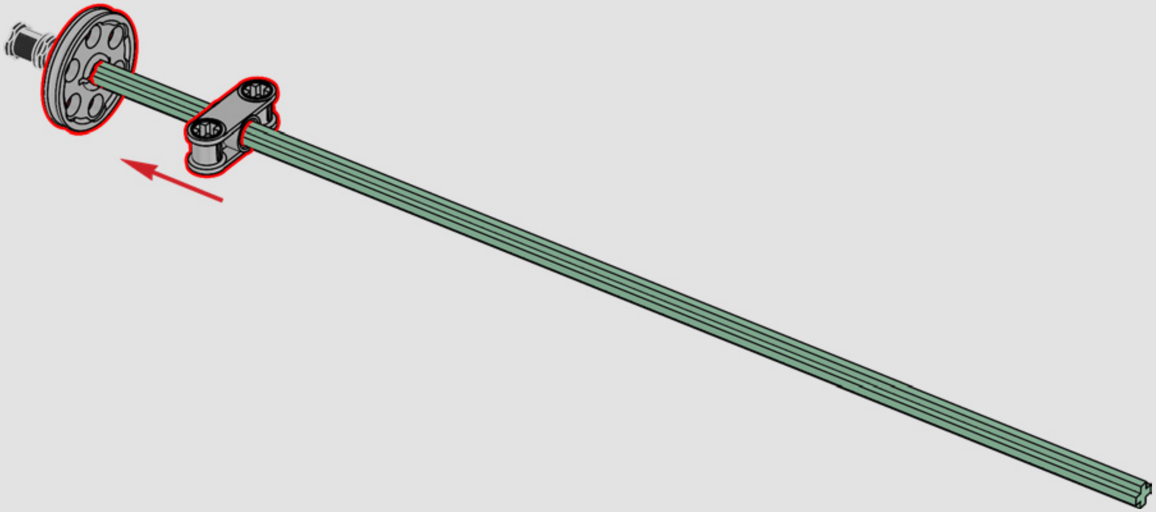

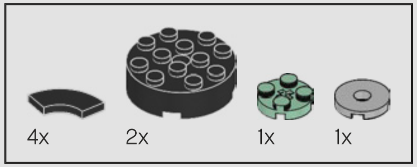

284

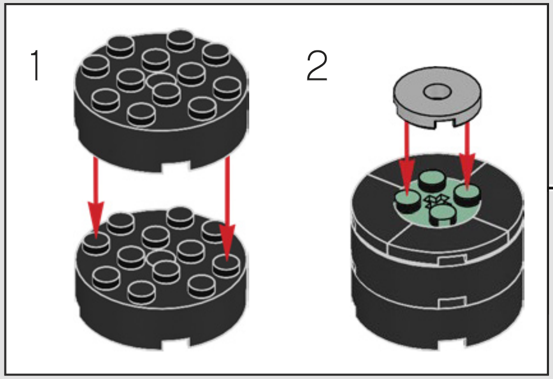

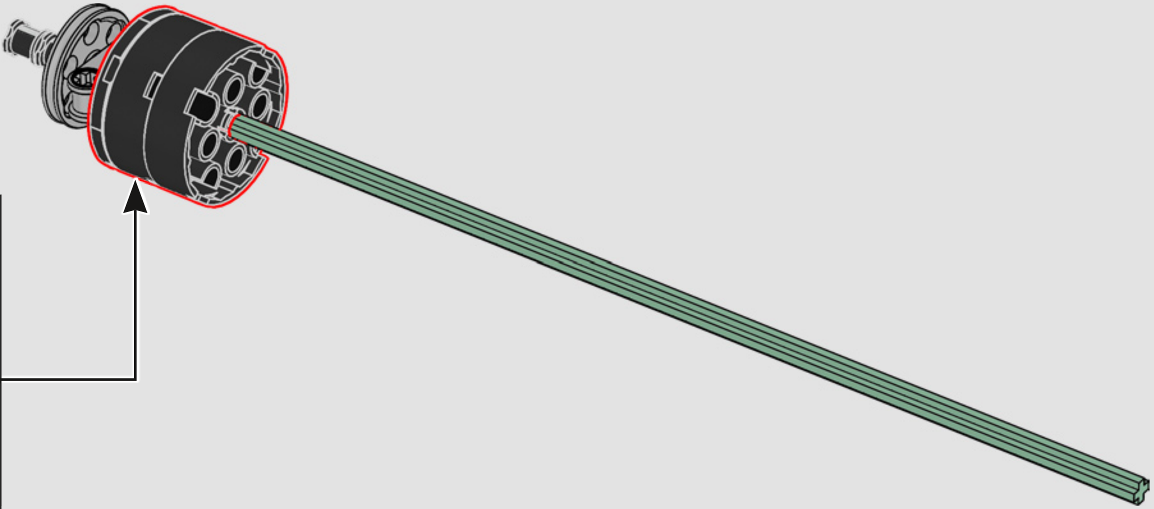

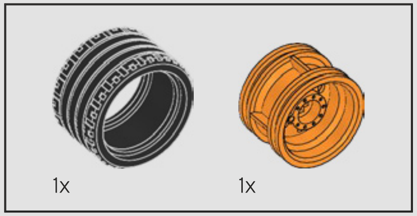

285

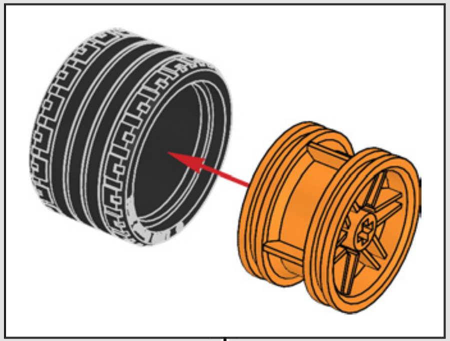

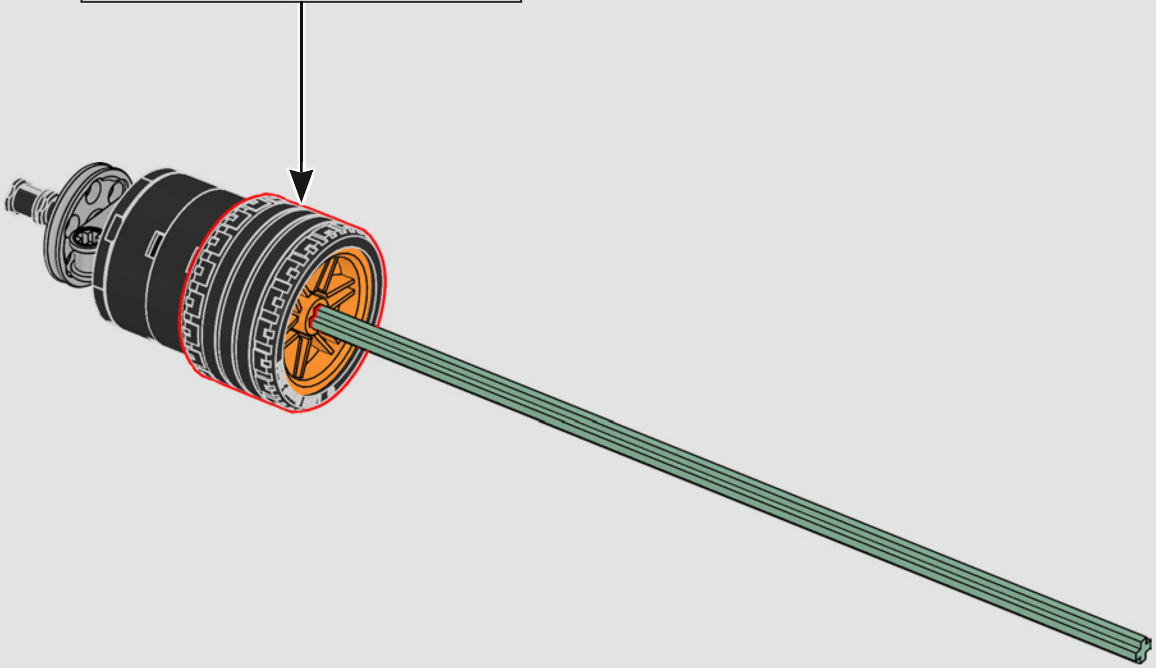

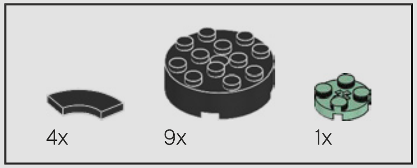

286

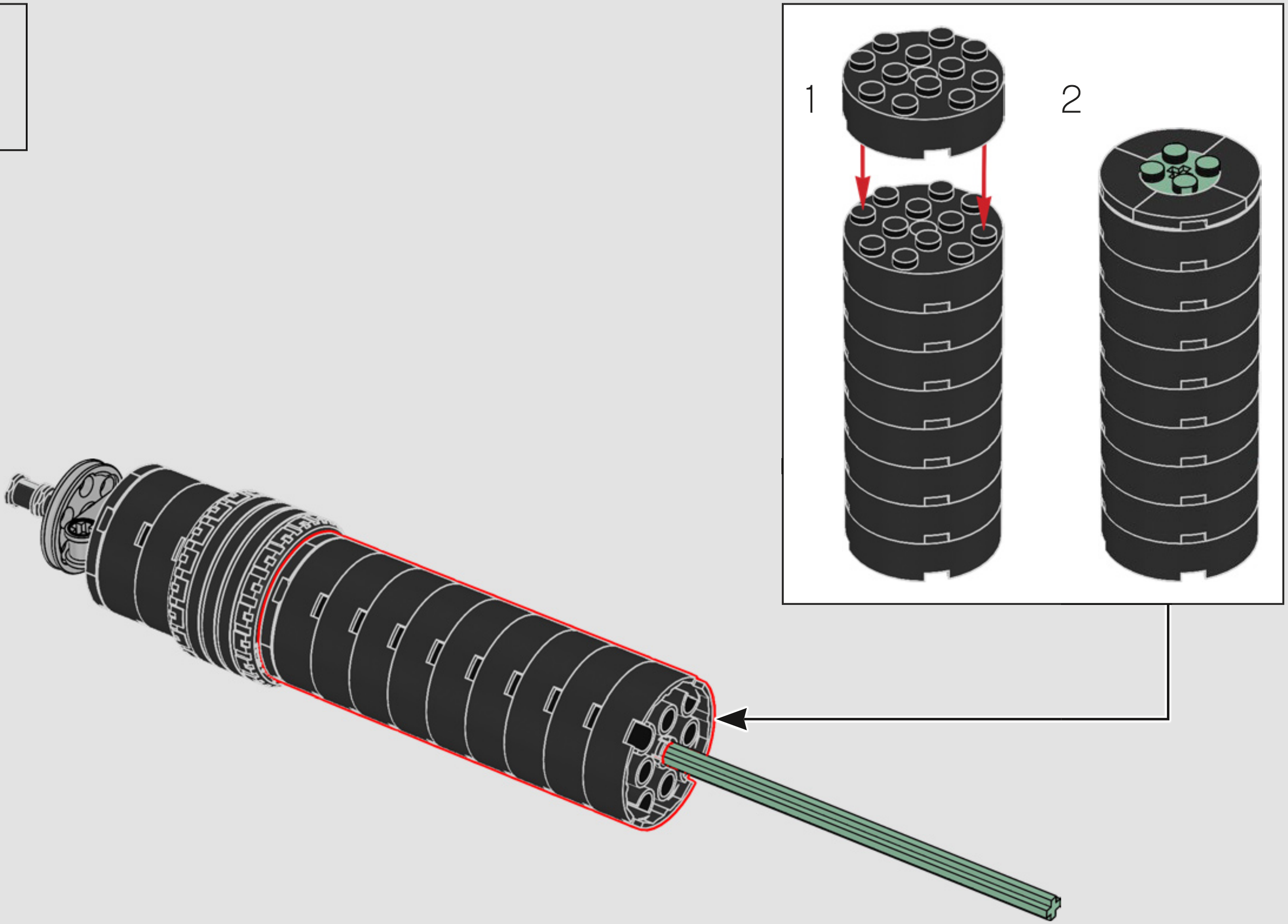

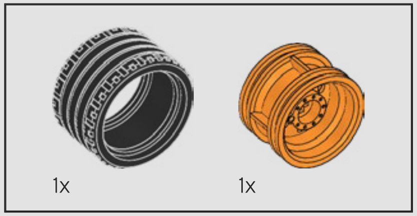

287

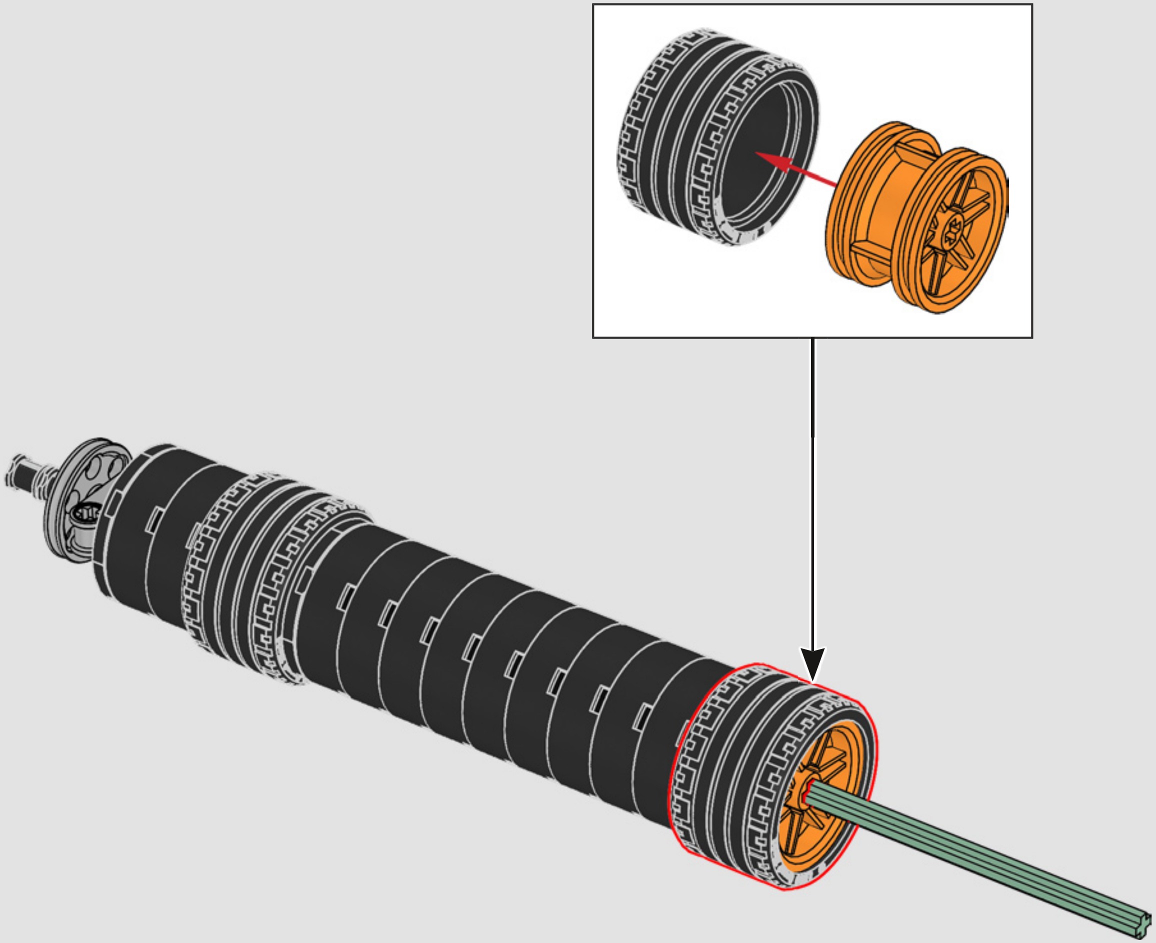

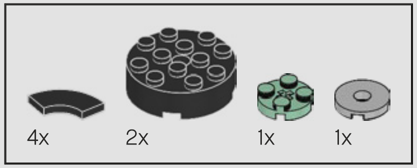

288

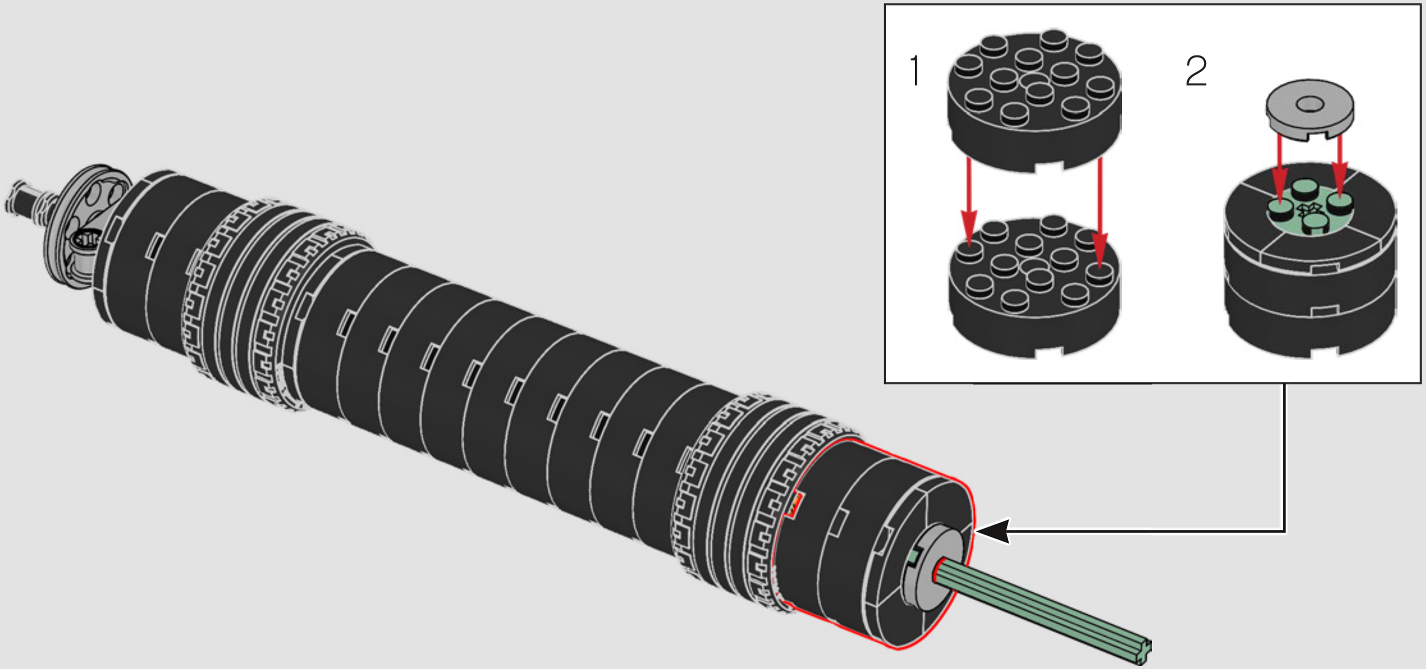

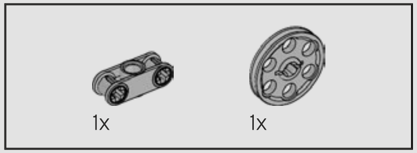

289

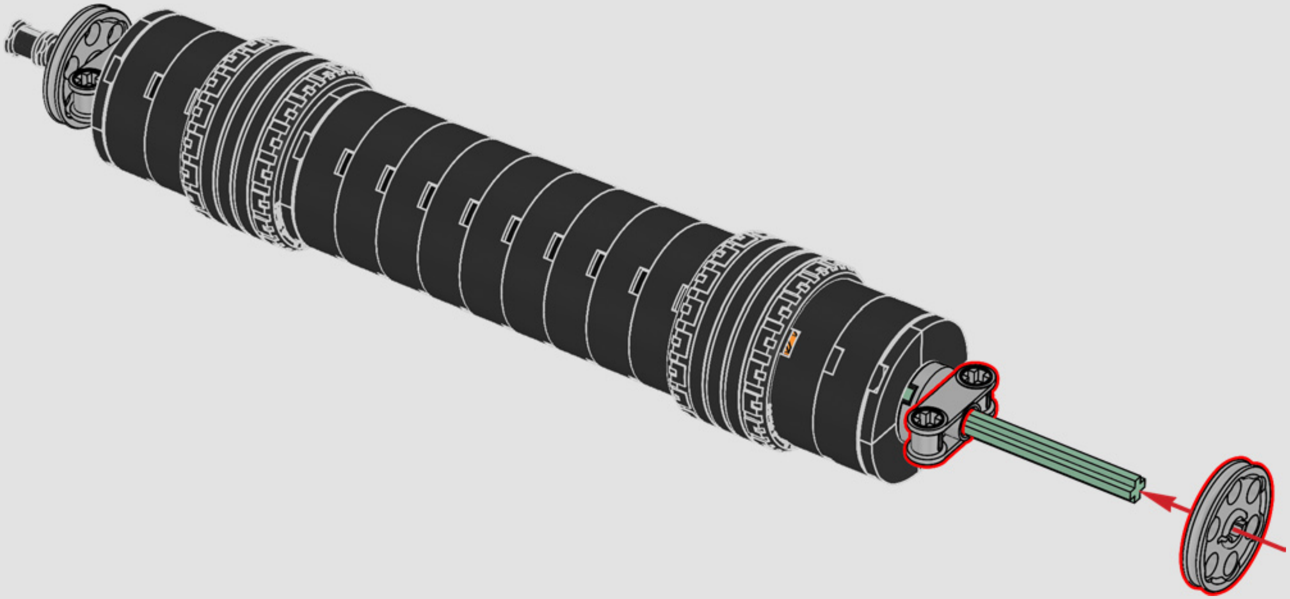

290

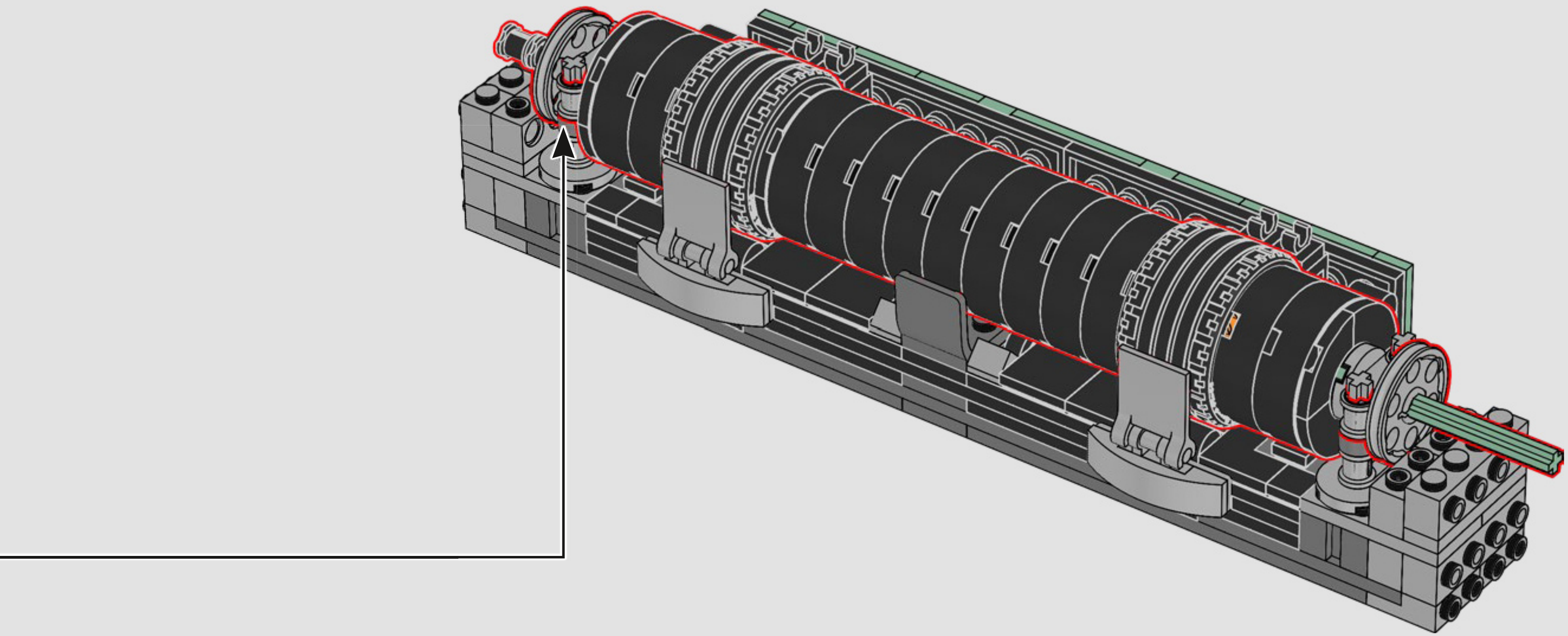

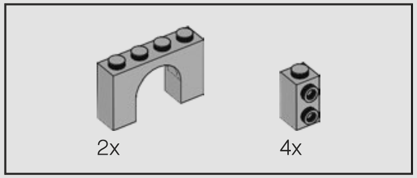

291

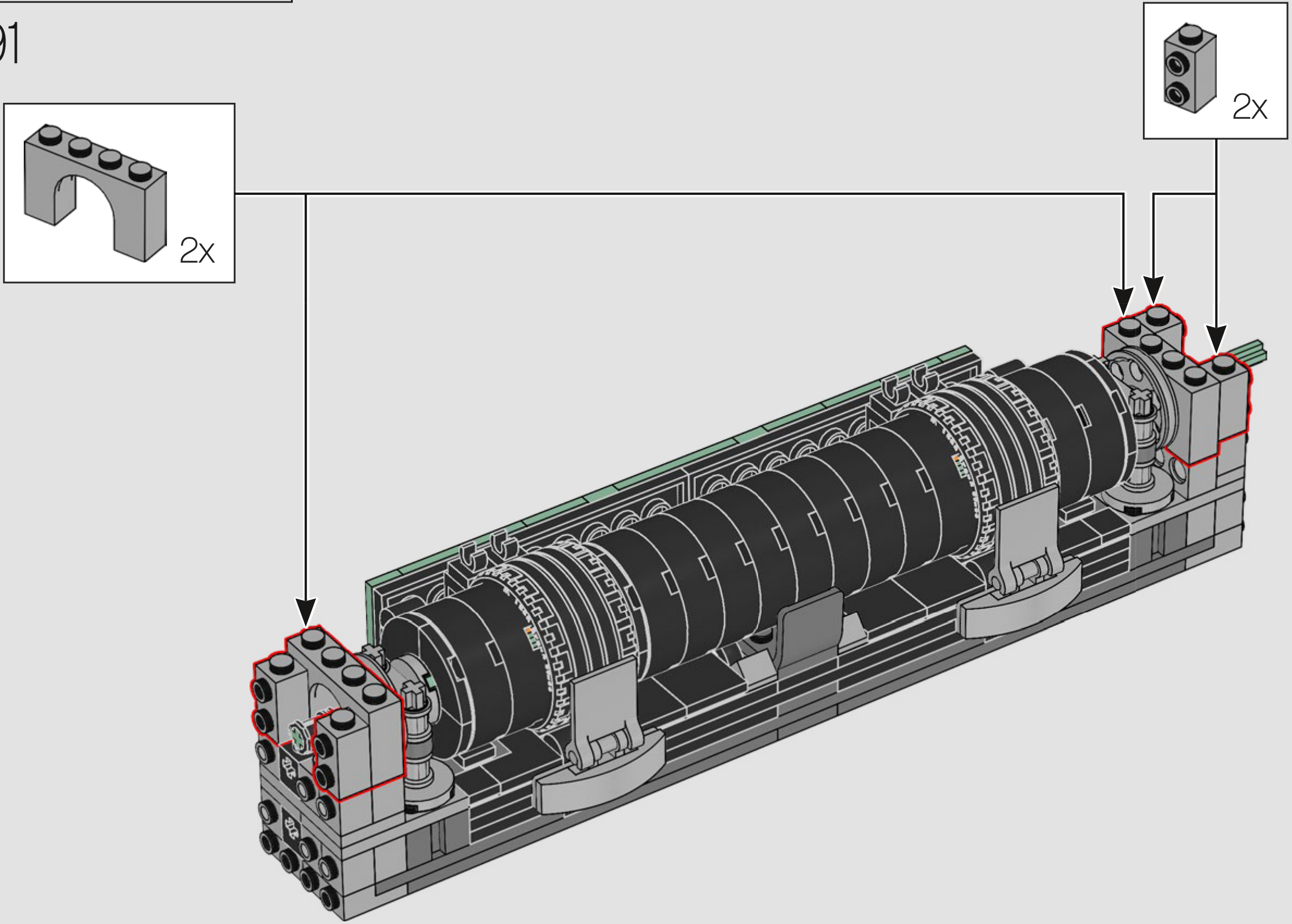

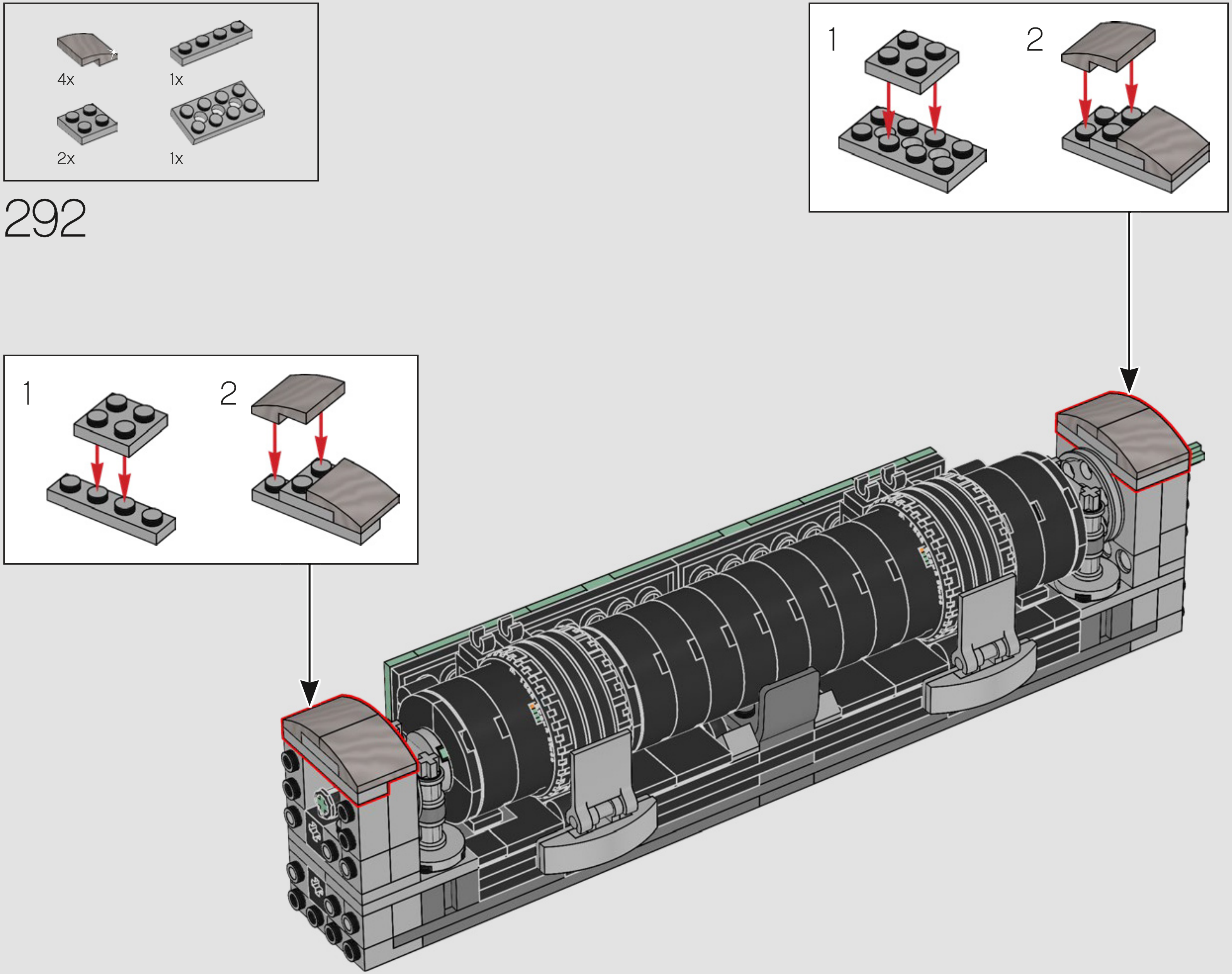
4x
1x
2x
1x
292
1
2
1
2

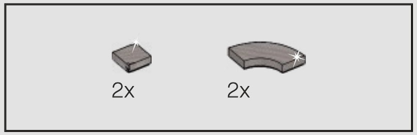

293

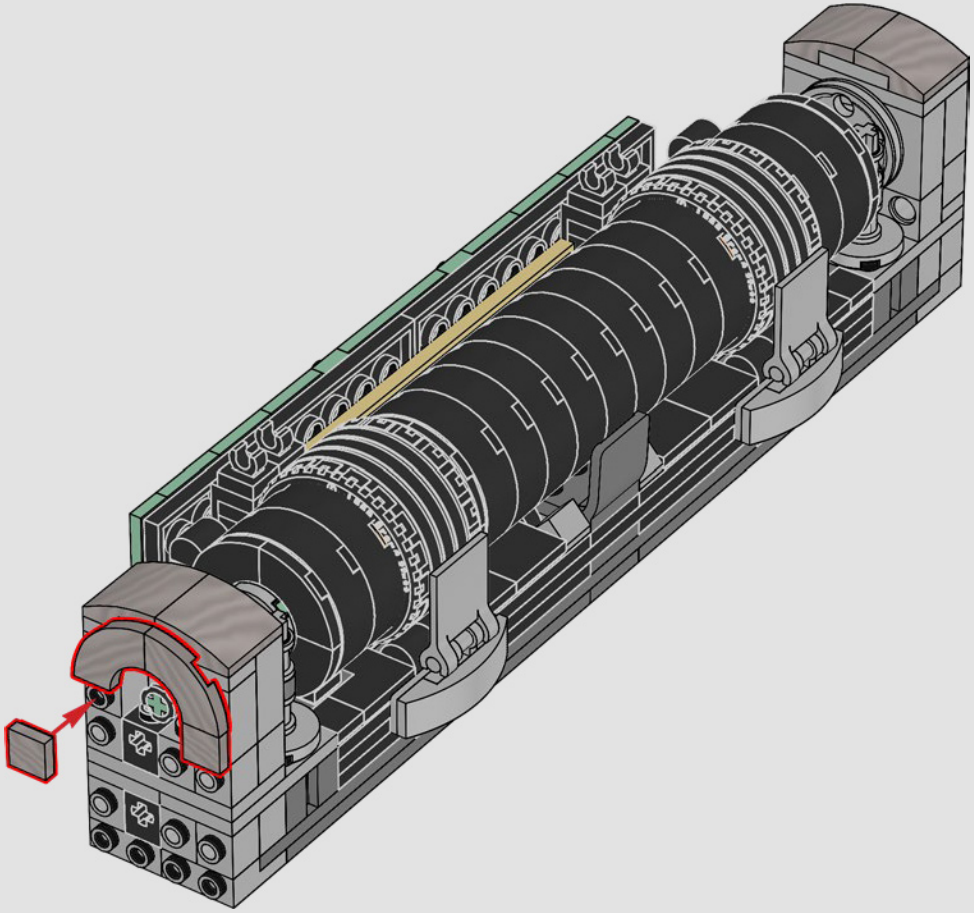

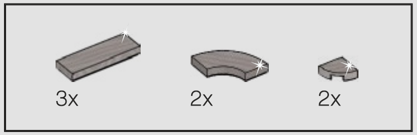

294

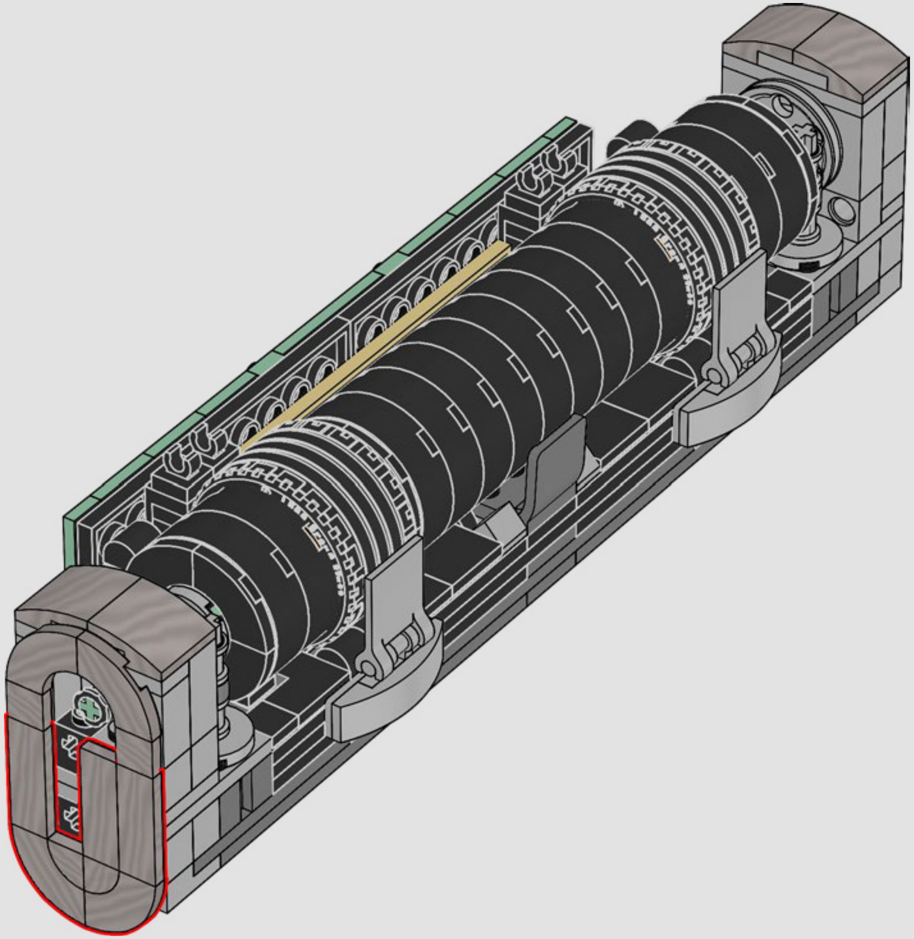

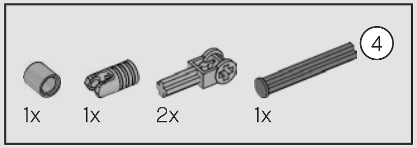

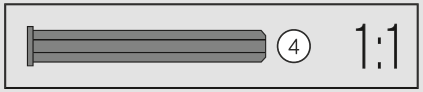

295

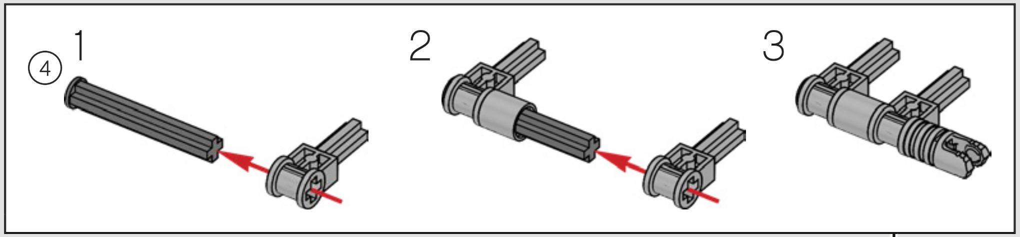

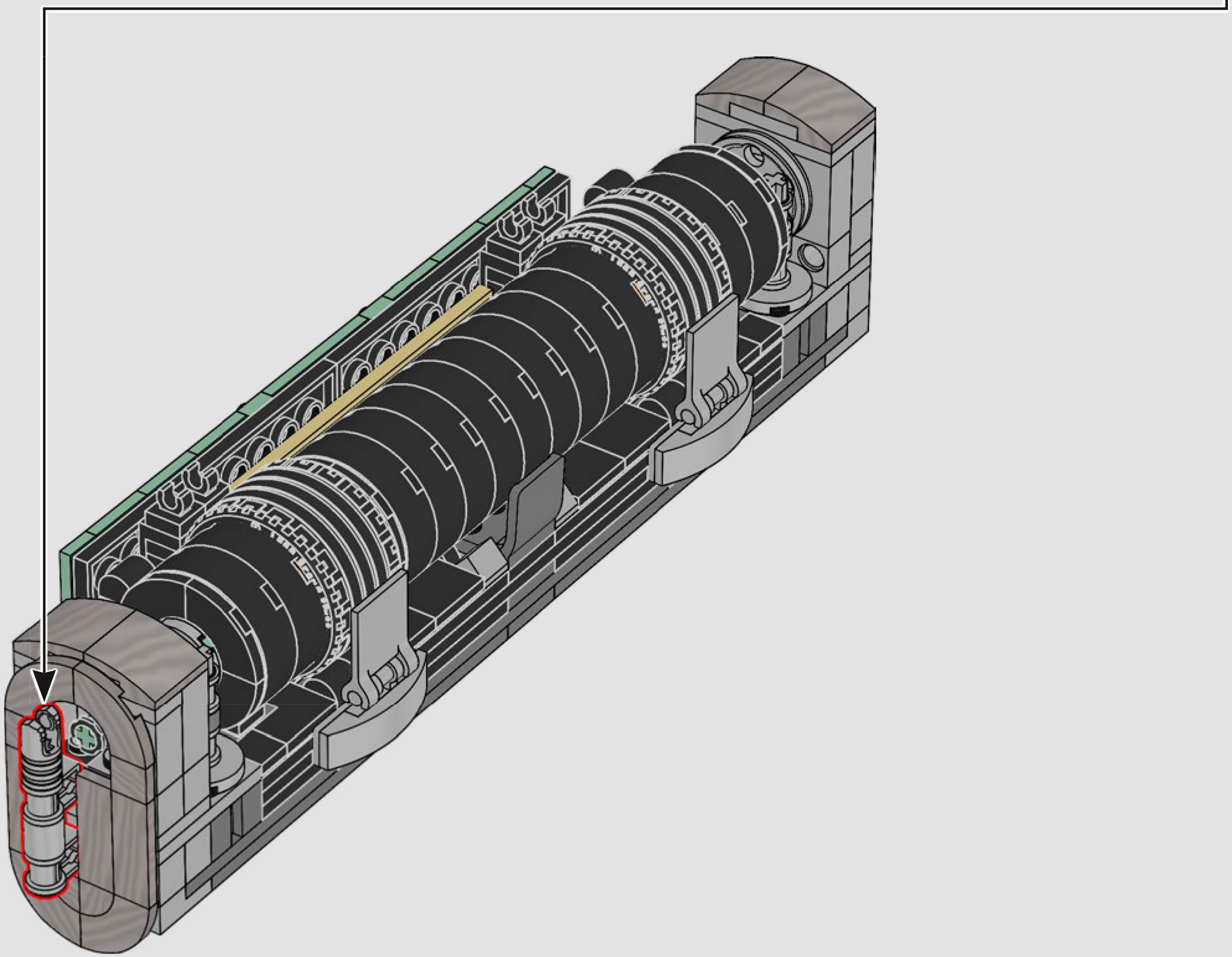

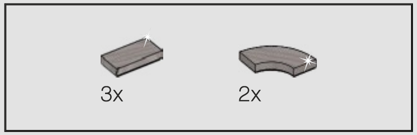

296

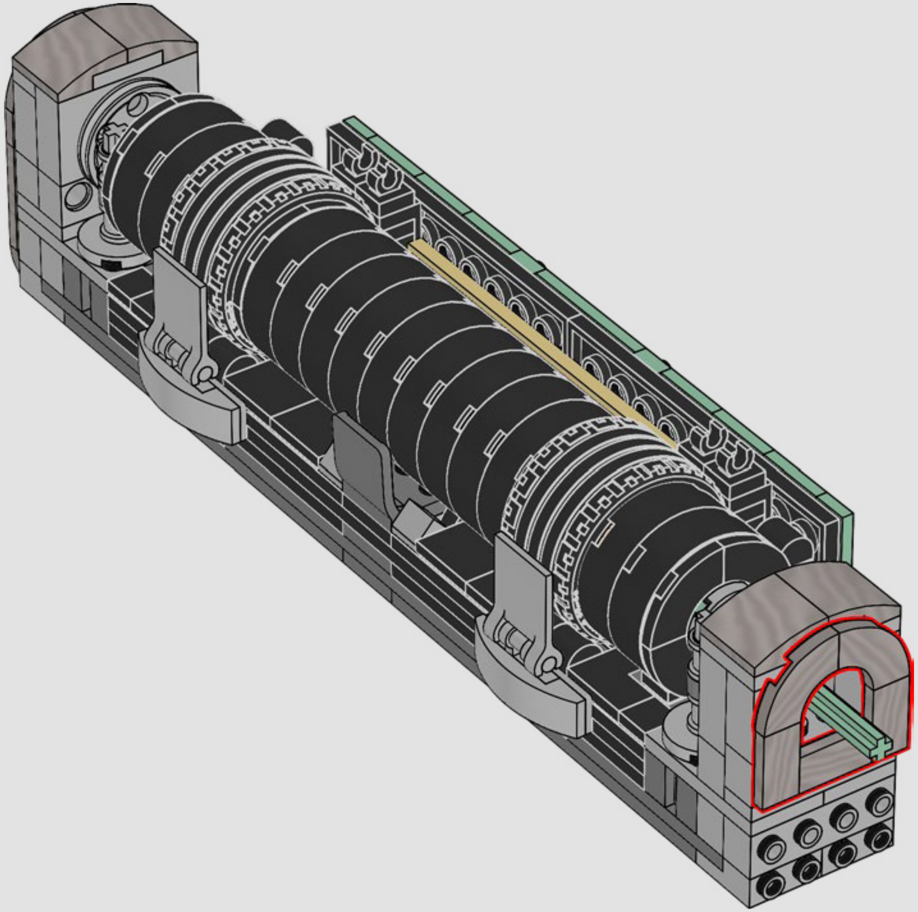

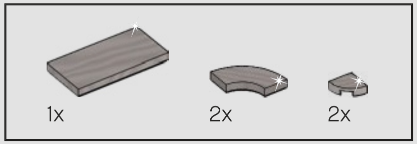

297

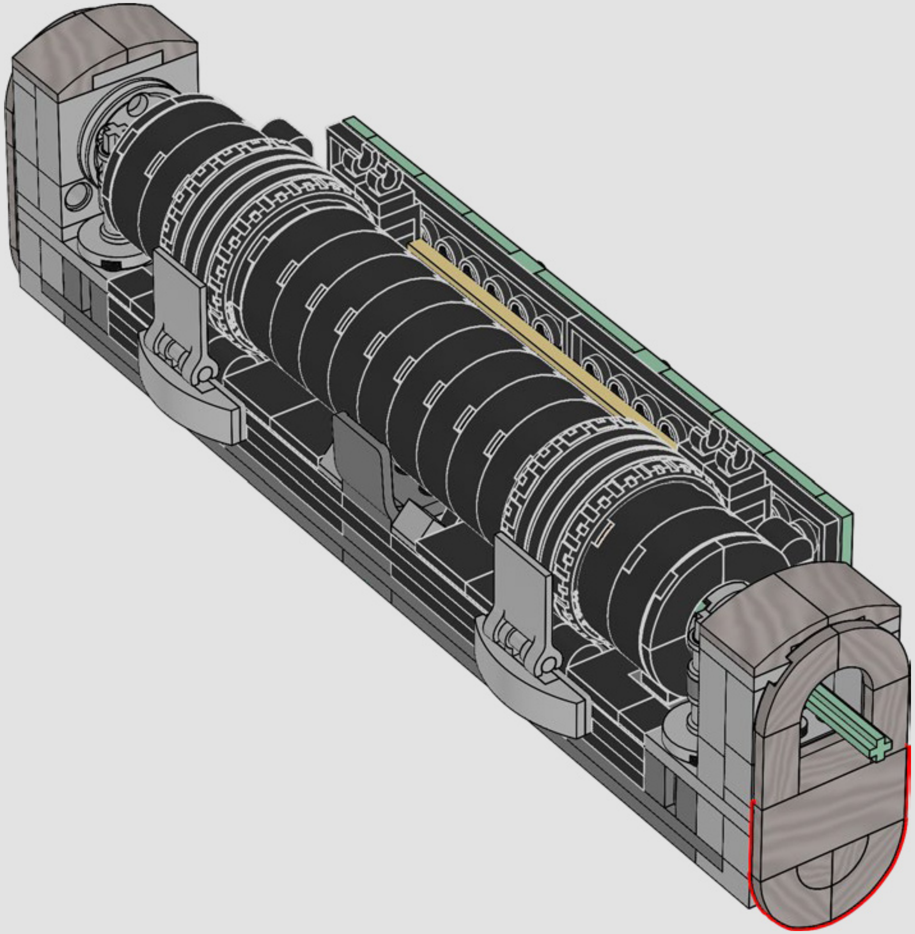

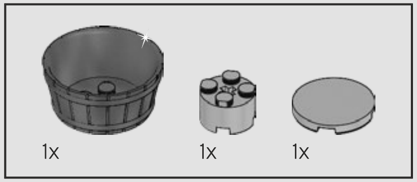

298

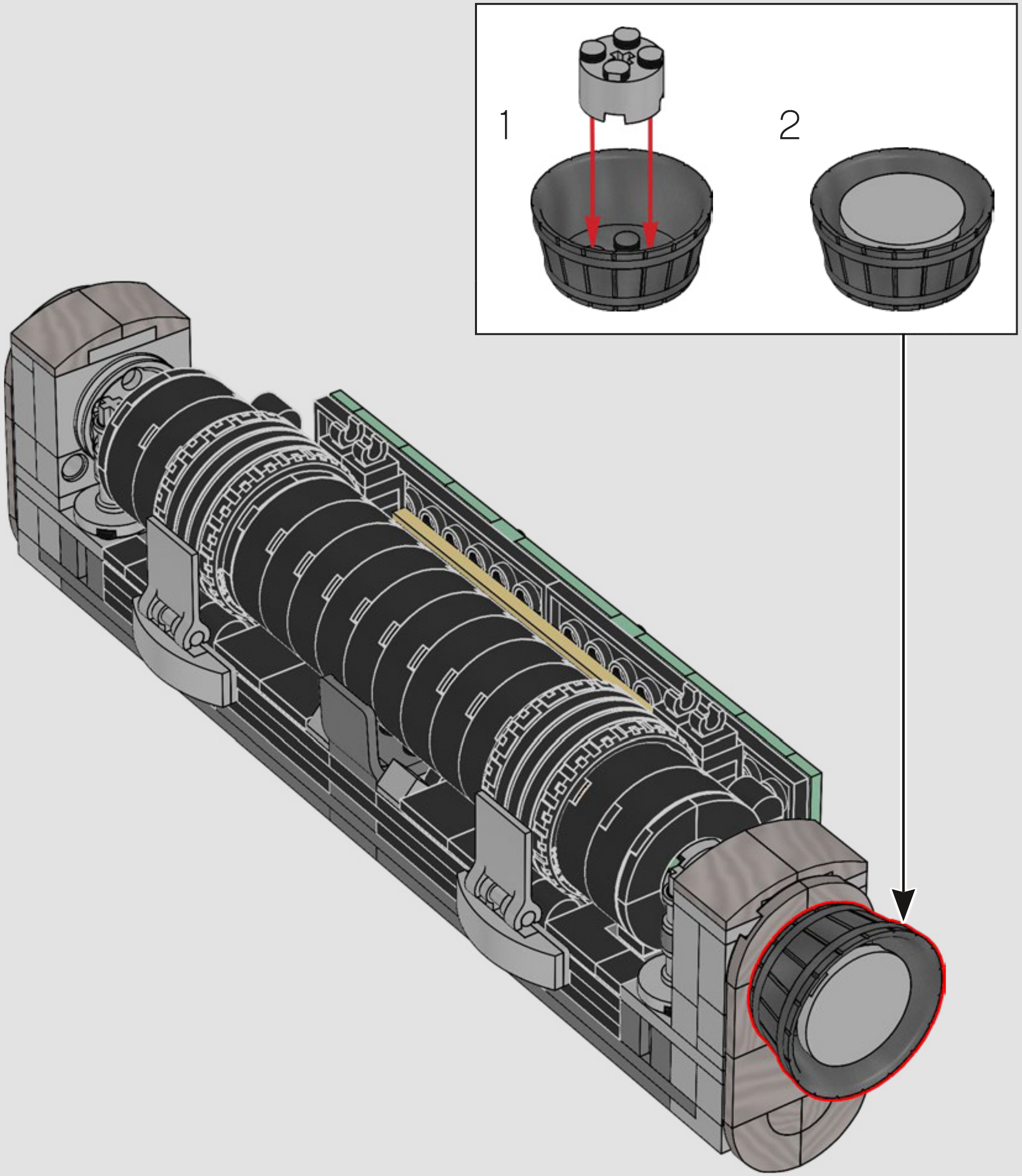

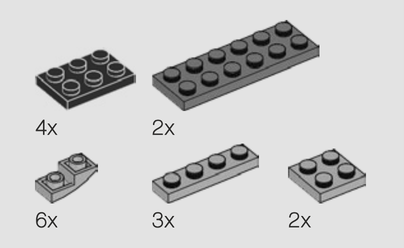
4x
2x
6x
3x
2x

299

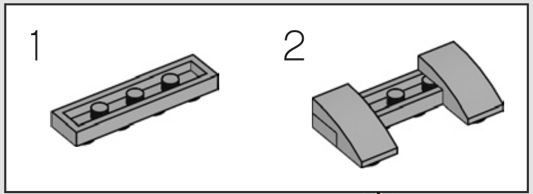

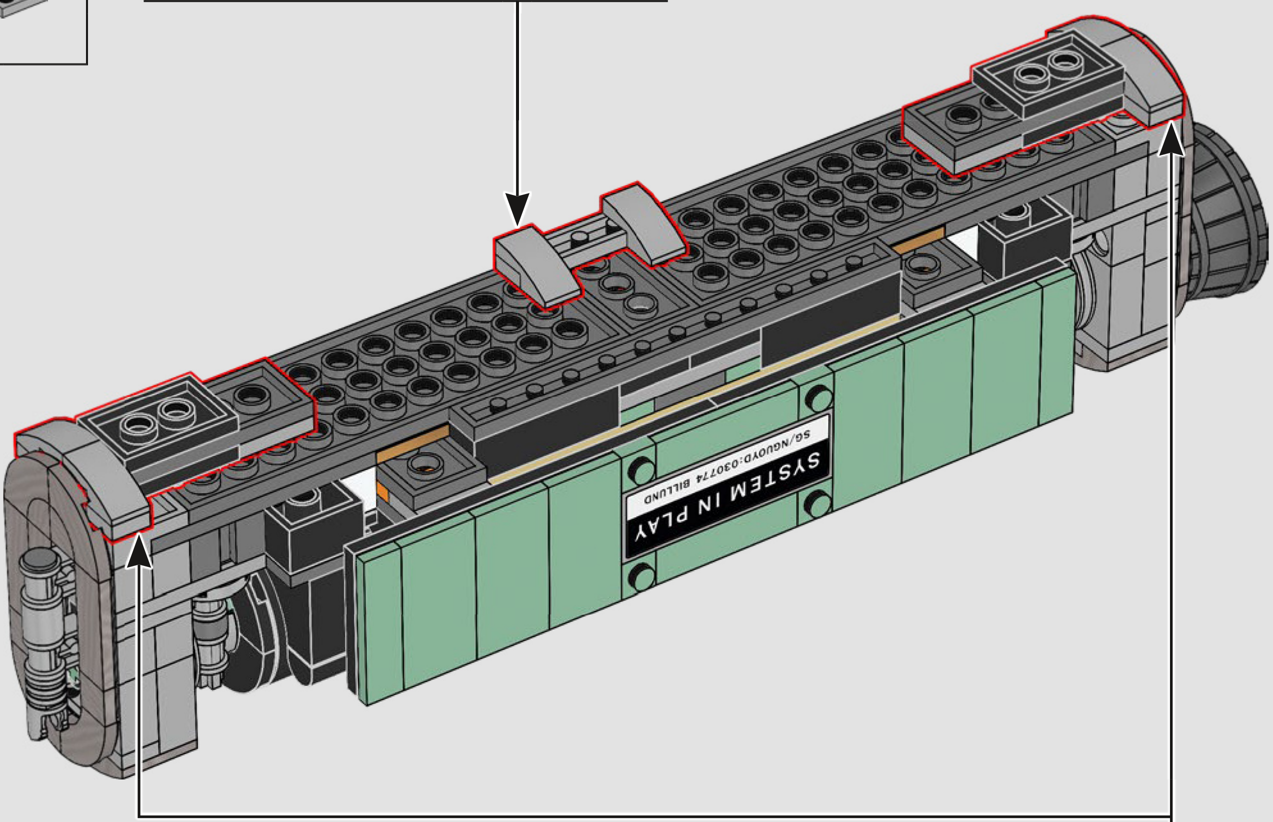
SYSTEM IN PLAY

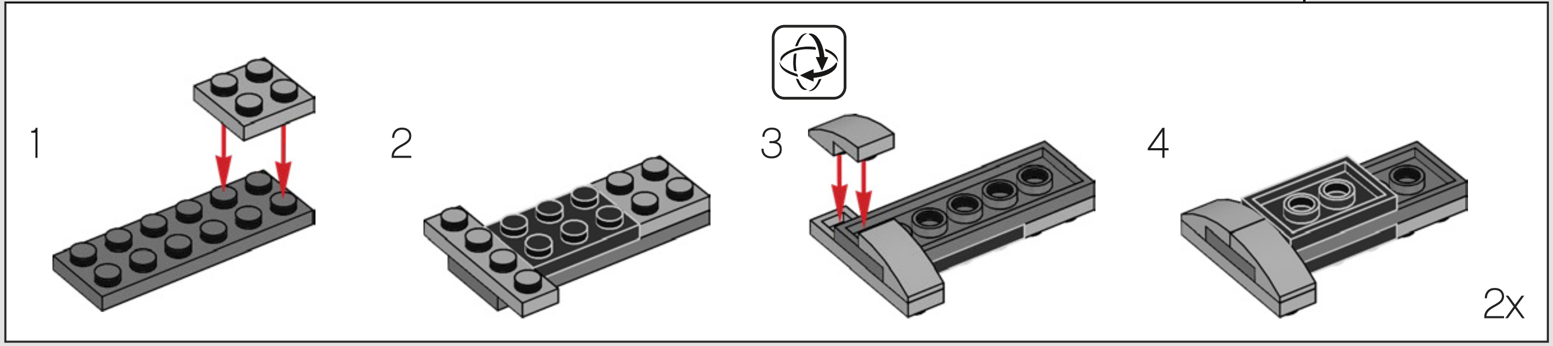

300

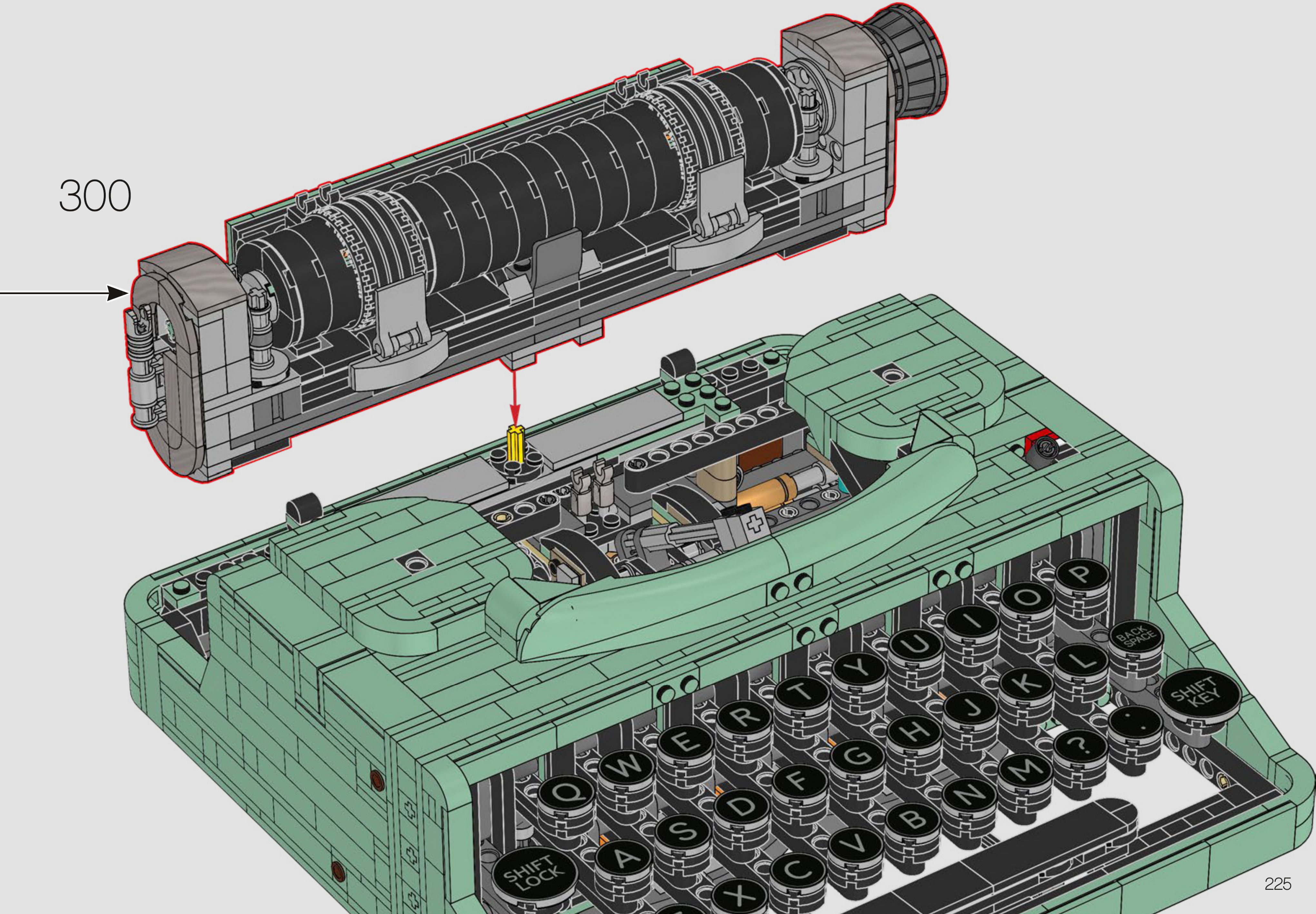

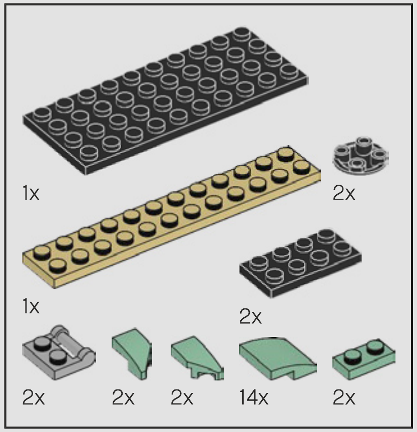
1x
2x
1x
2x
2x
2x
2x
14x
2x

301

1

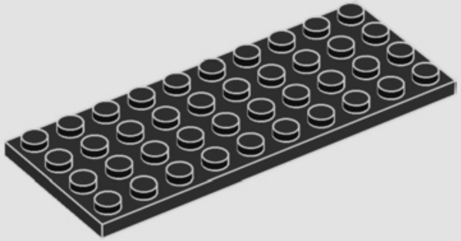

2

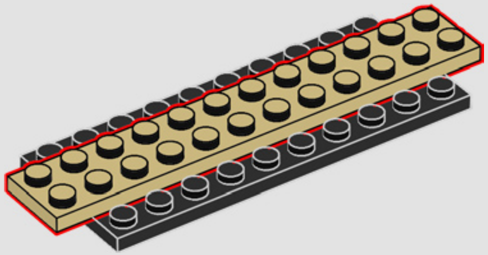

3

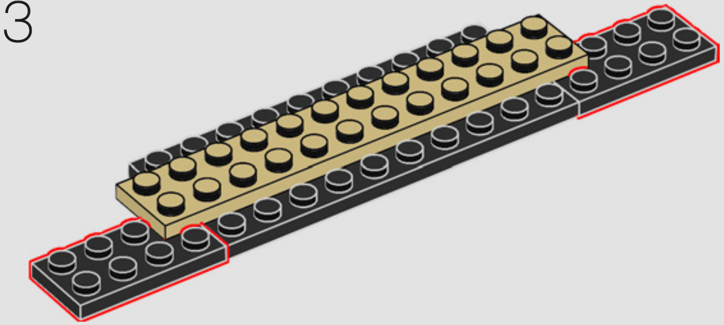

4

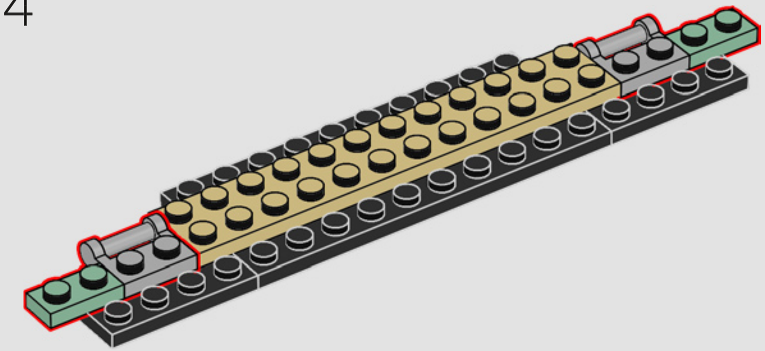

5

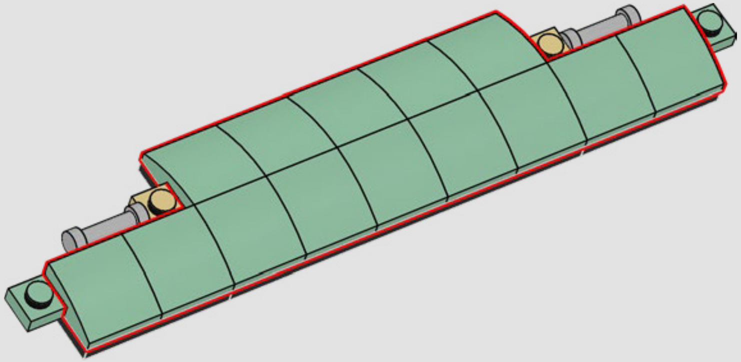

6

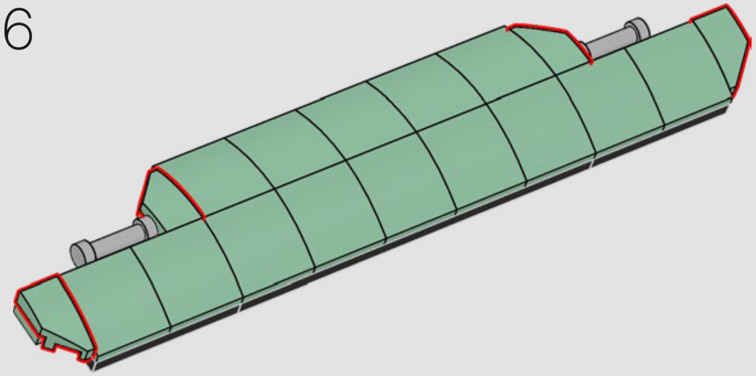

7

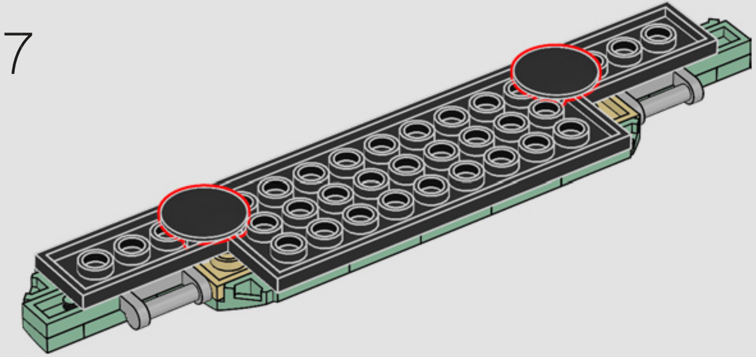

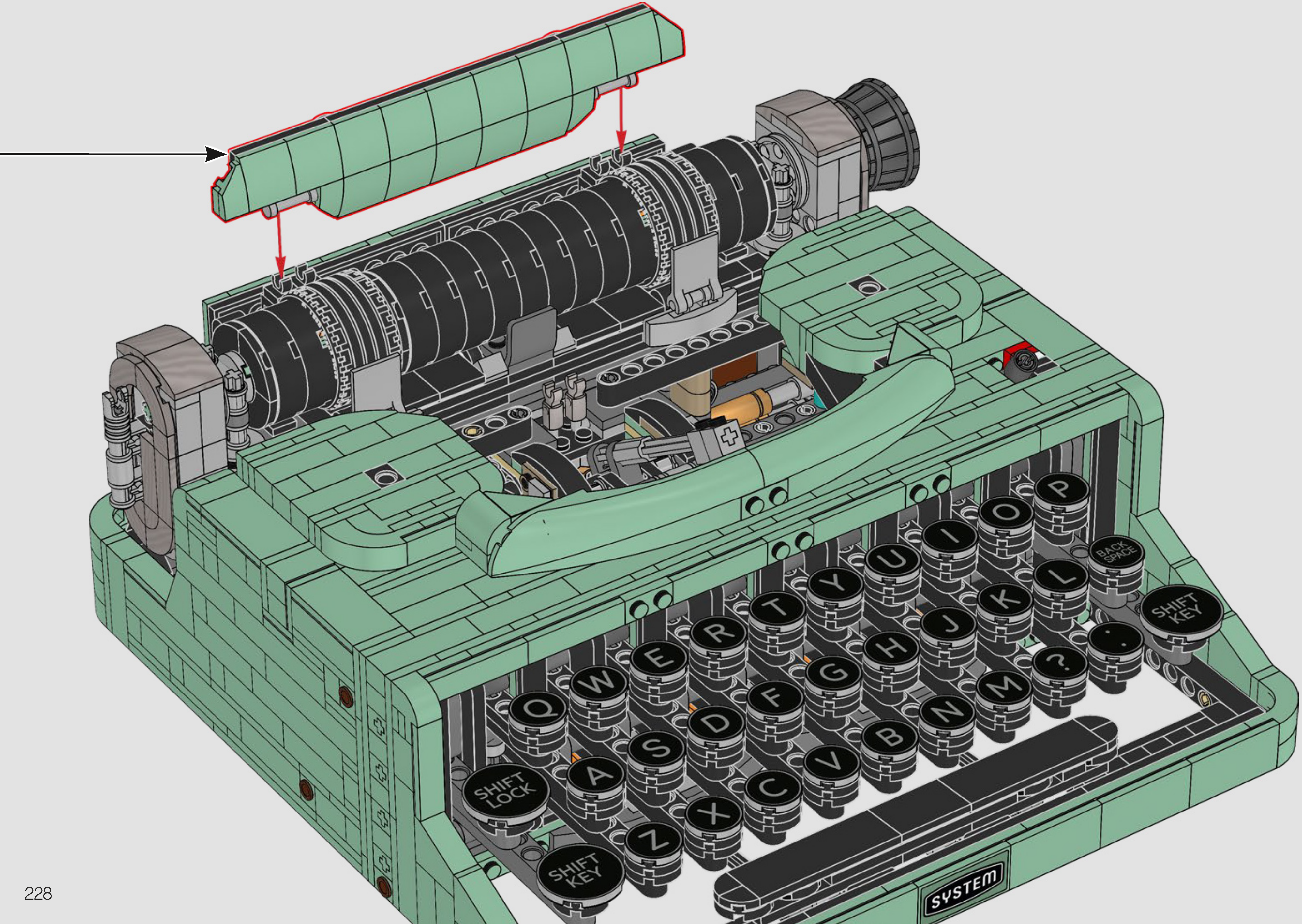
Q
W
E
R
T
Y
U
I
O
P
A
S
D
F
G
H
J
K
L
Z
X
C
V
B
N
M
?
:
SHIFT LOCK
SHIFT KEY
BACK SPACE
SHIFT KEY
SYSTEM

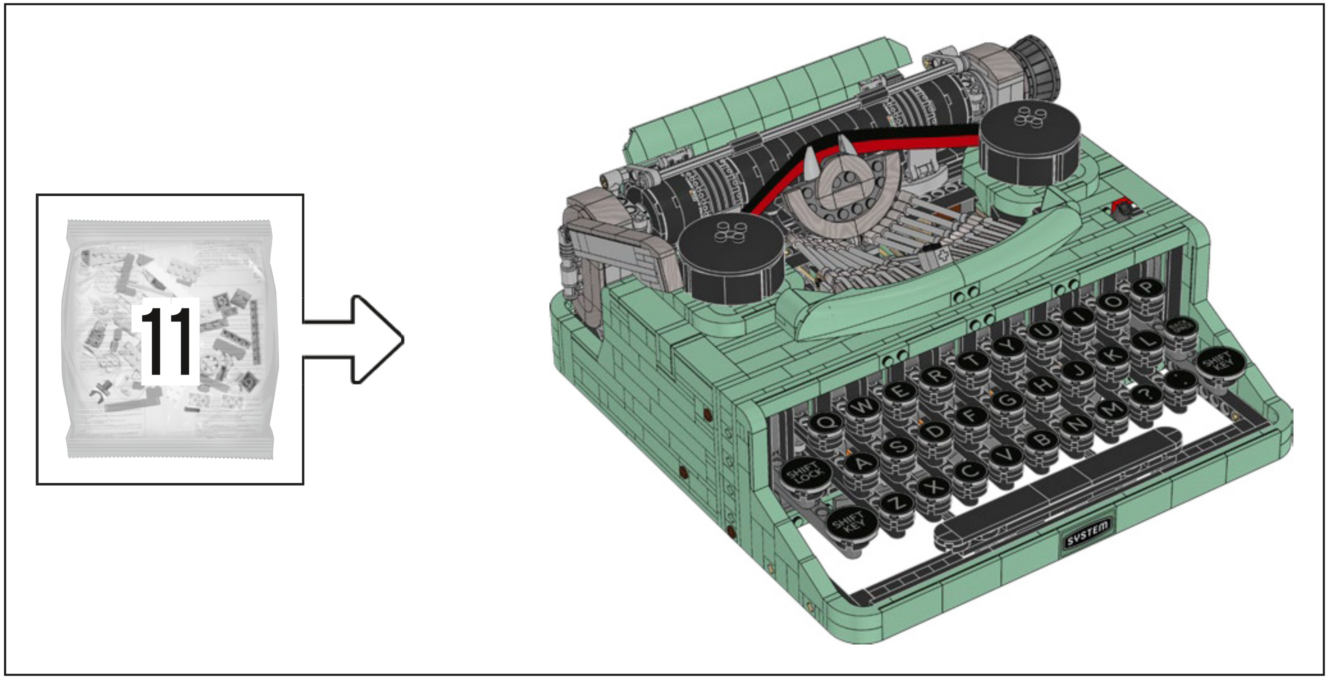
11

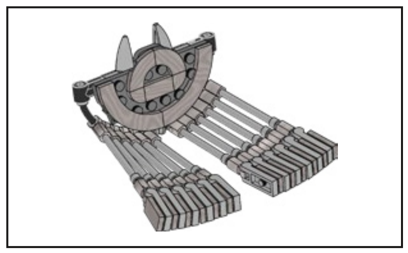

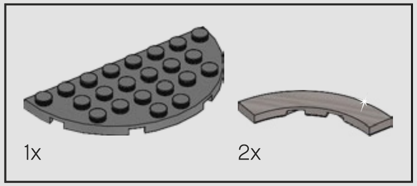

302

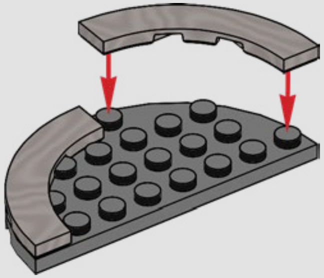

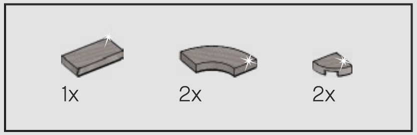

303

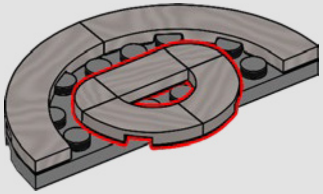

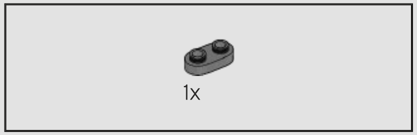

304

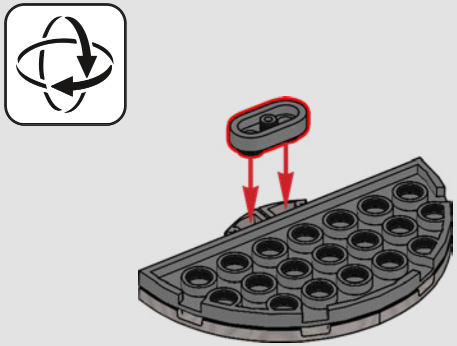

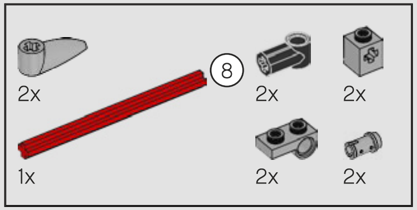
2x
8
2x
2x
1x
2x
2x

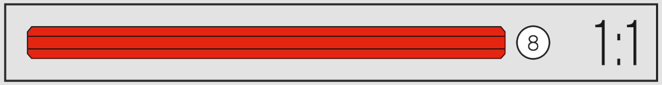

305

1

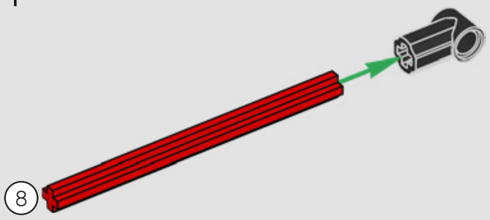

2

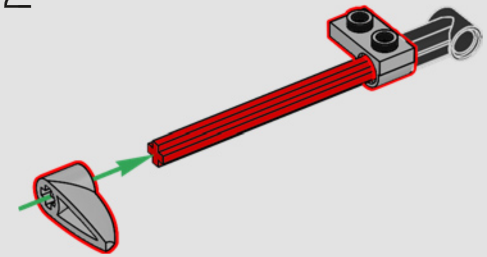

3

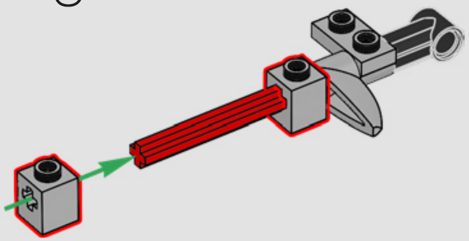

4

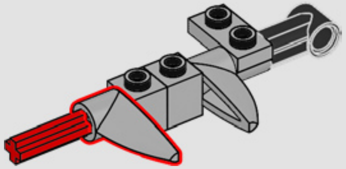

5

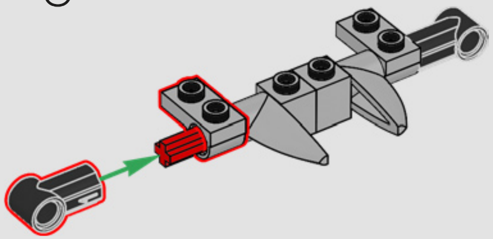

6

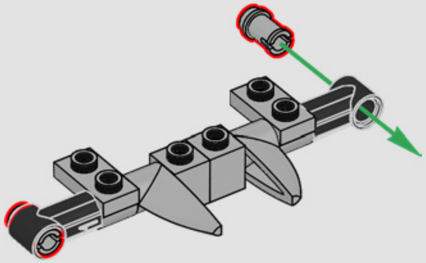

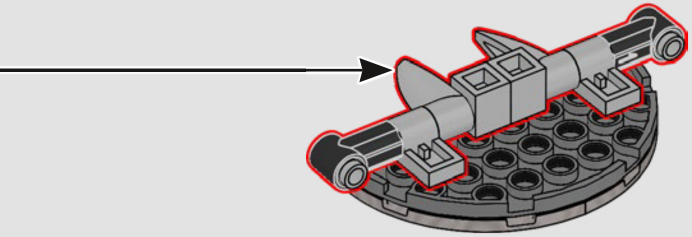

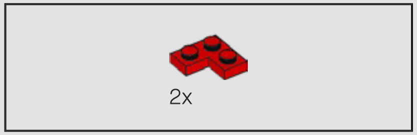

306

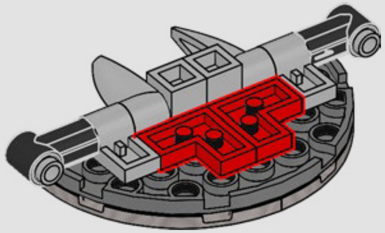

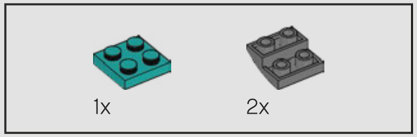

307

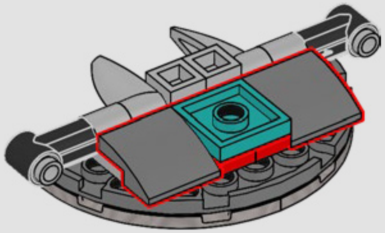

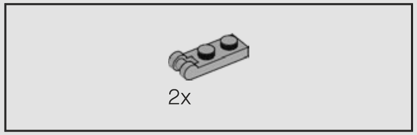

308

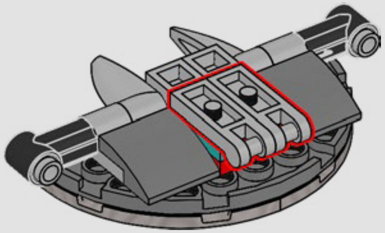

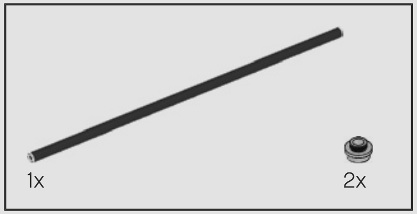

309

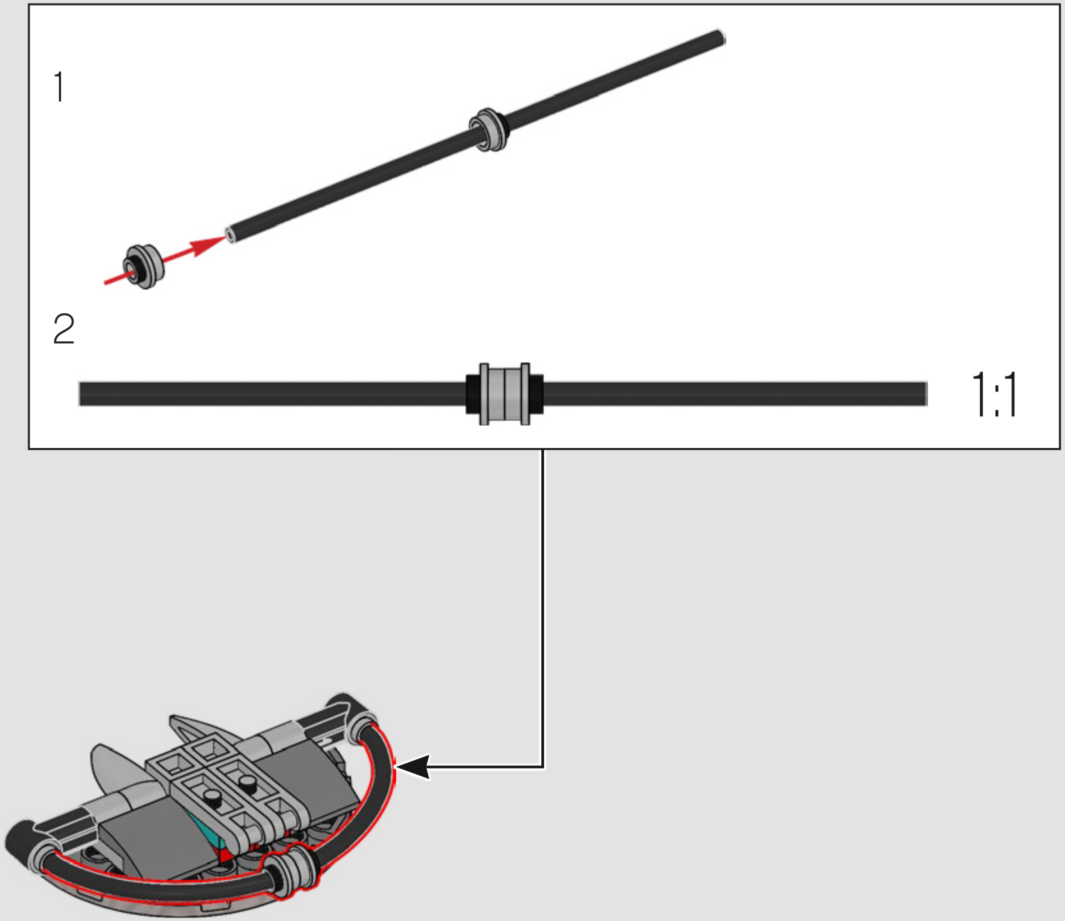

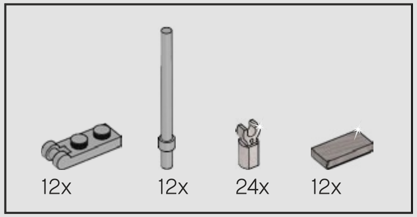
12x
12x
24x
12x

310

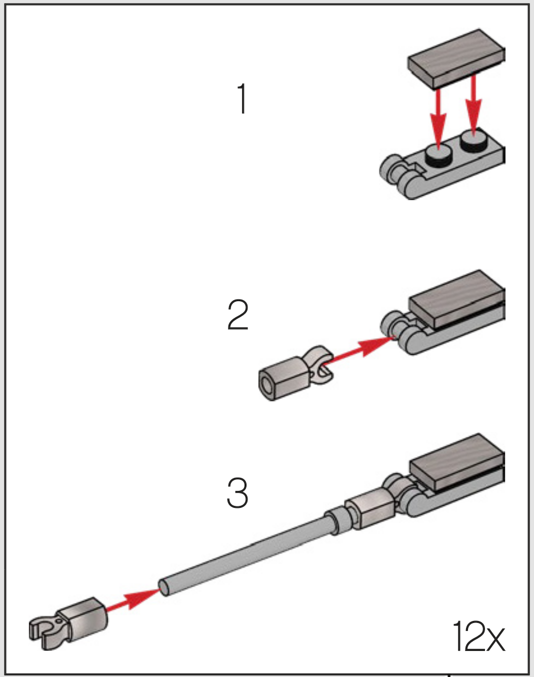

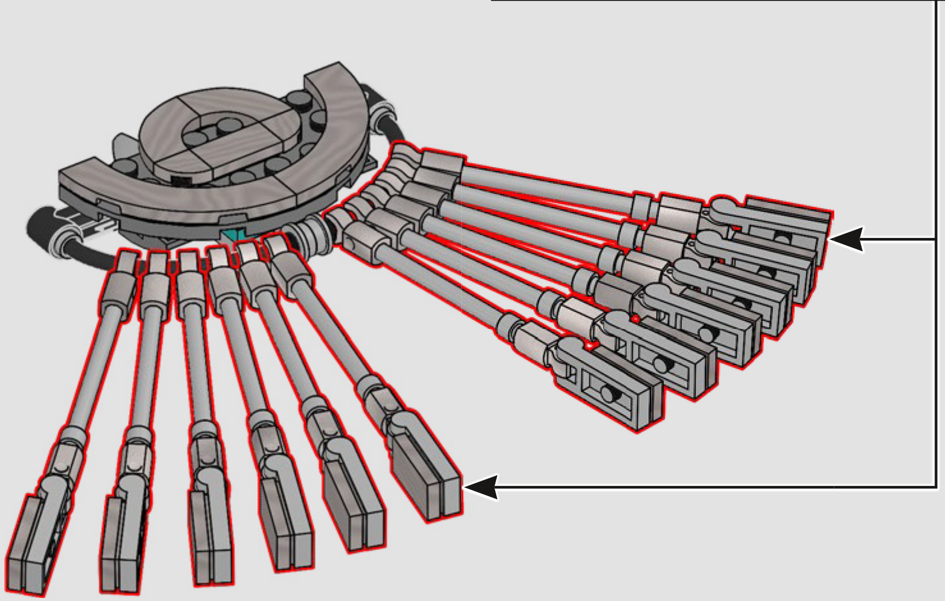

311

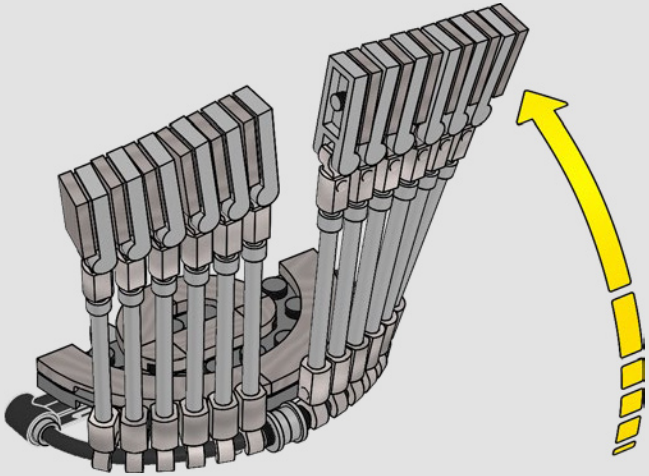

312

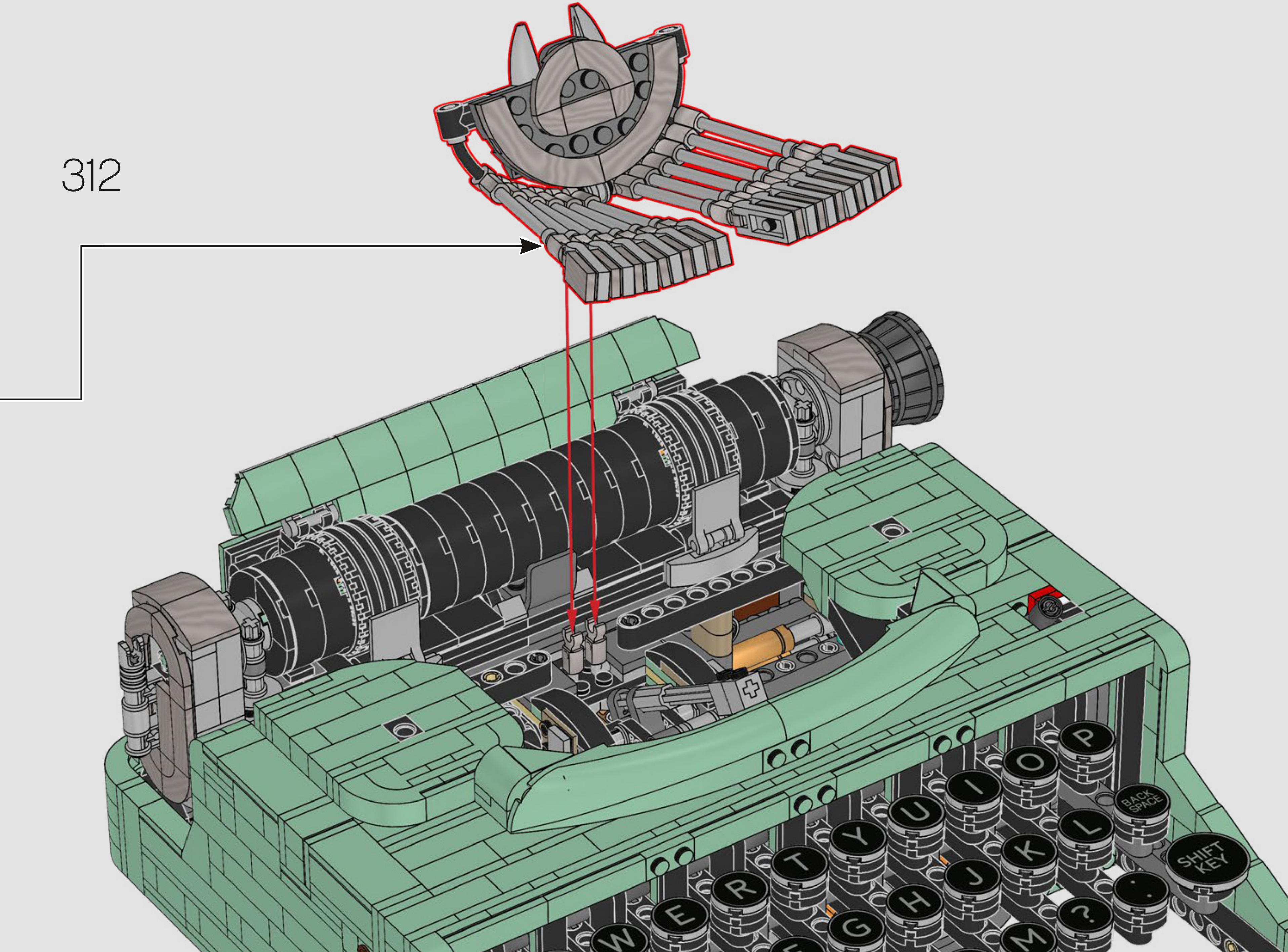
P
O
I
U
Y
T
R
E
W
L
K
J
H
G
M
?
BACK SPACE
SHIFT KEY

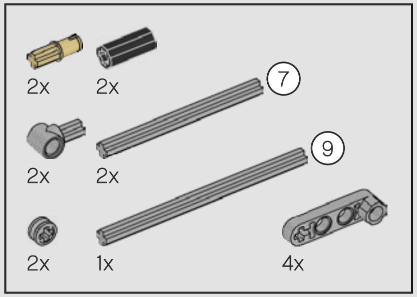
2x
2x
7
2x
2x
9
2x
1x
4x

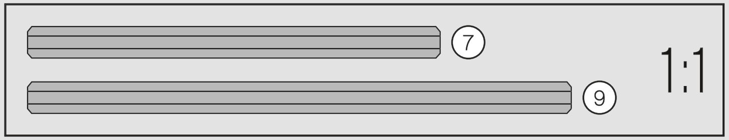

313

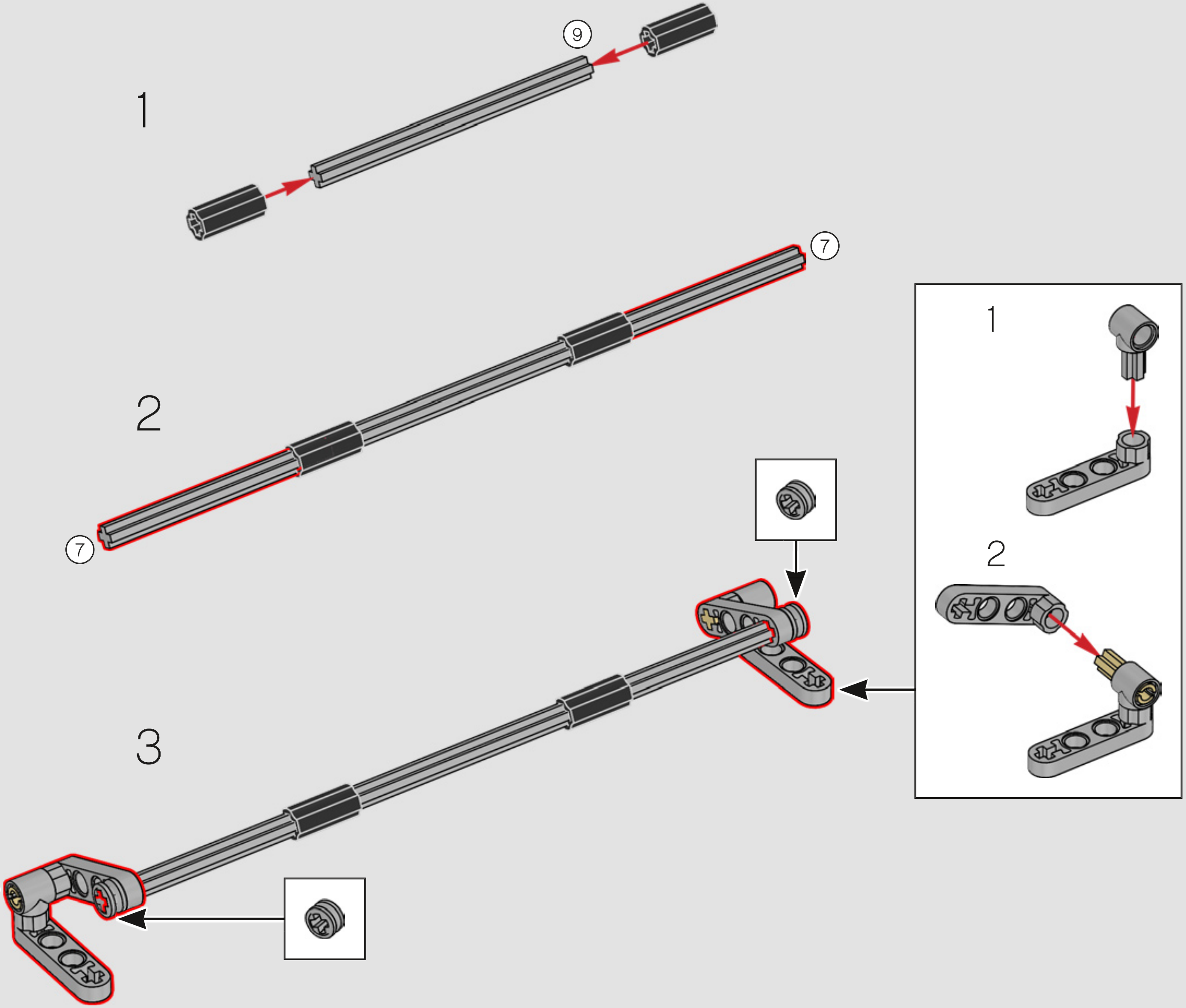

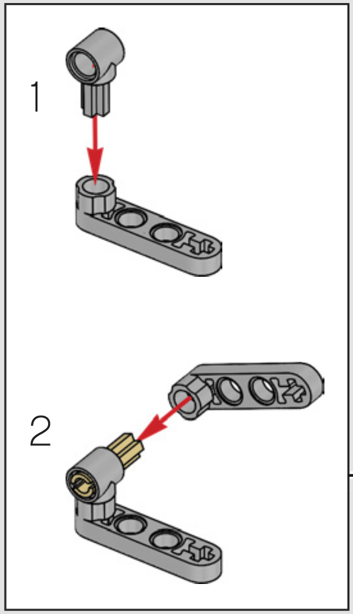

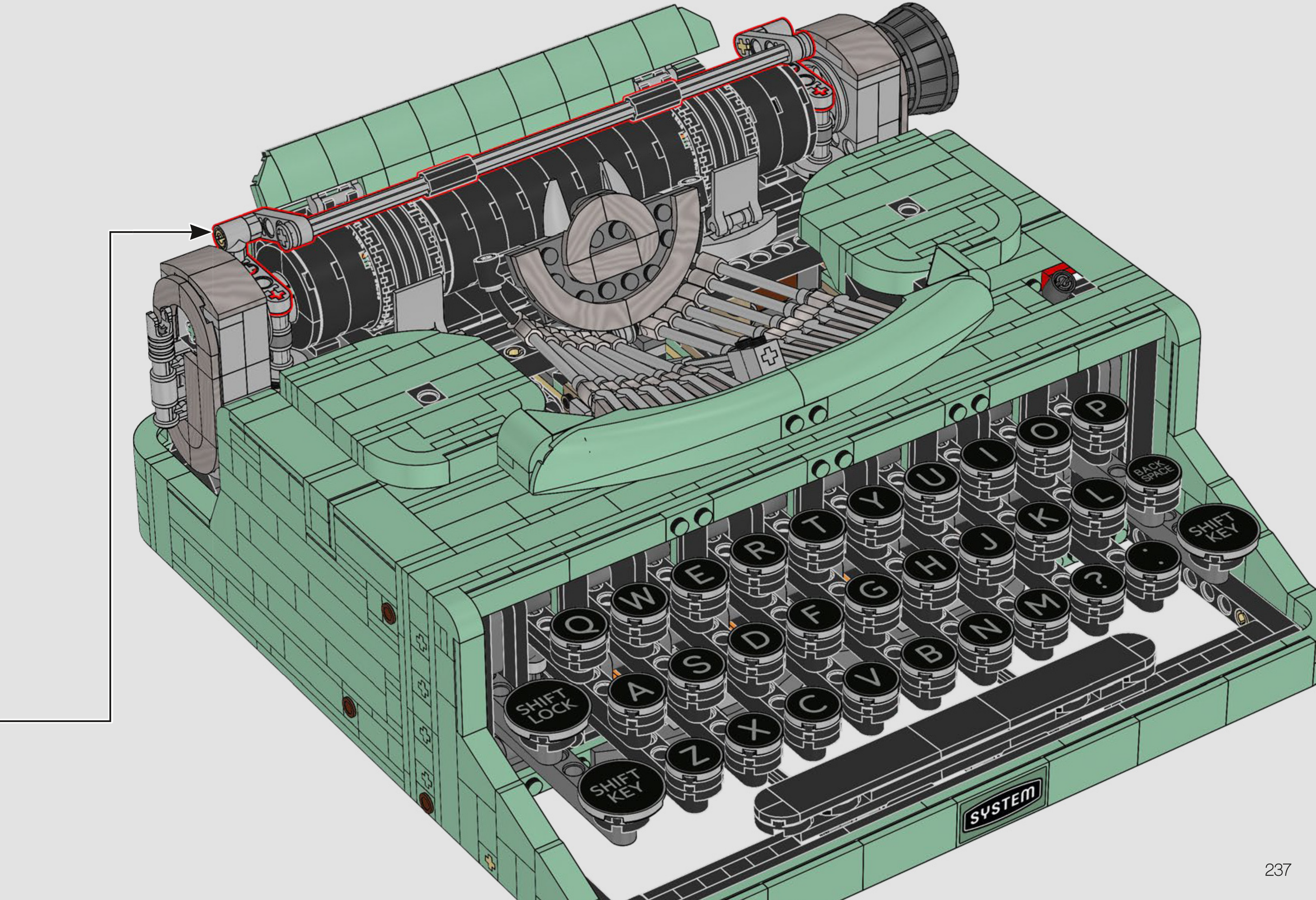
Q
W
E
R
T
Y
U
I
O
P
A
S
D
F
G
H
J
K
L
Z
X
C
V
B
N
M
?
.
SHIFT LOCK
SHIFT KEY
SHIFT KEY
BACK SPACE
SYSTEM

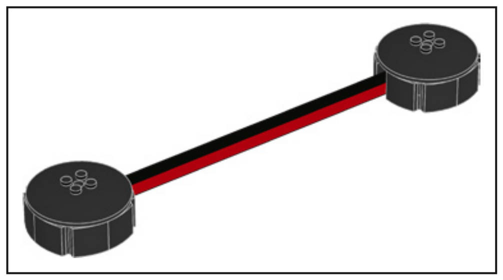

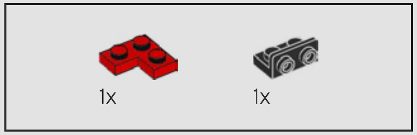

314

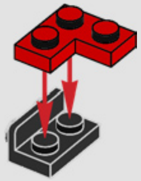

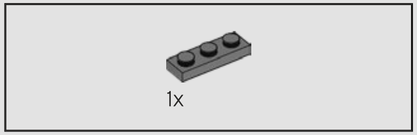

315

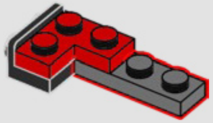

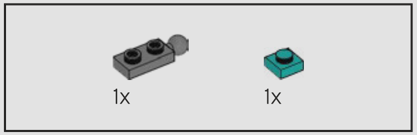

316

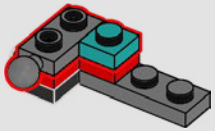

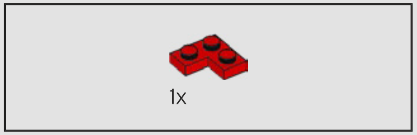

317

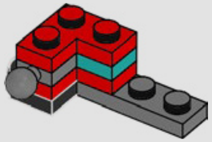

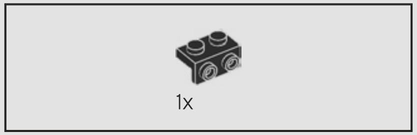

318

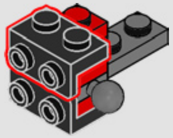

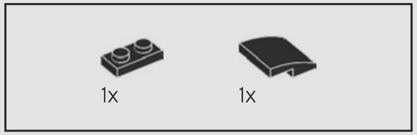

319

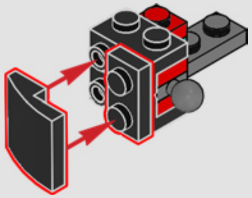

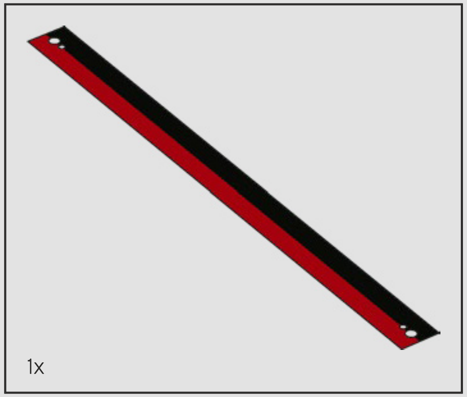

320

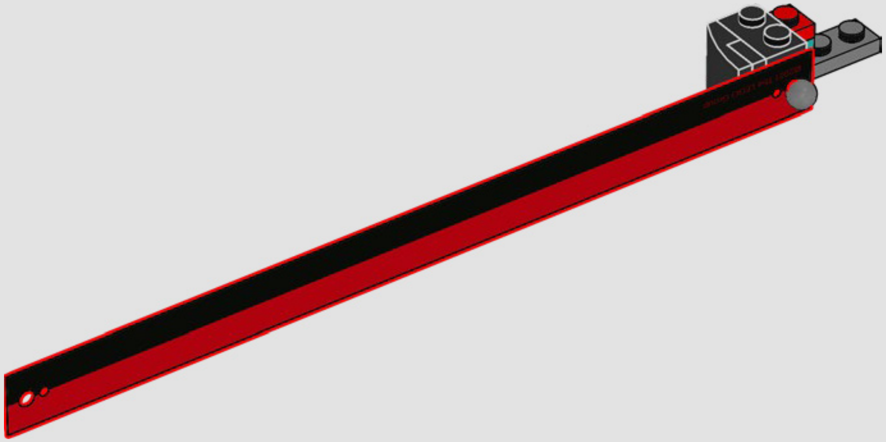

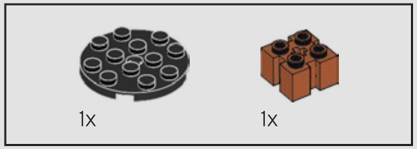

321

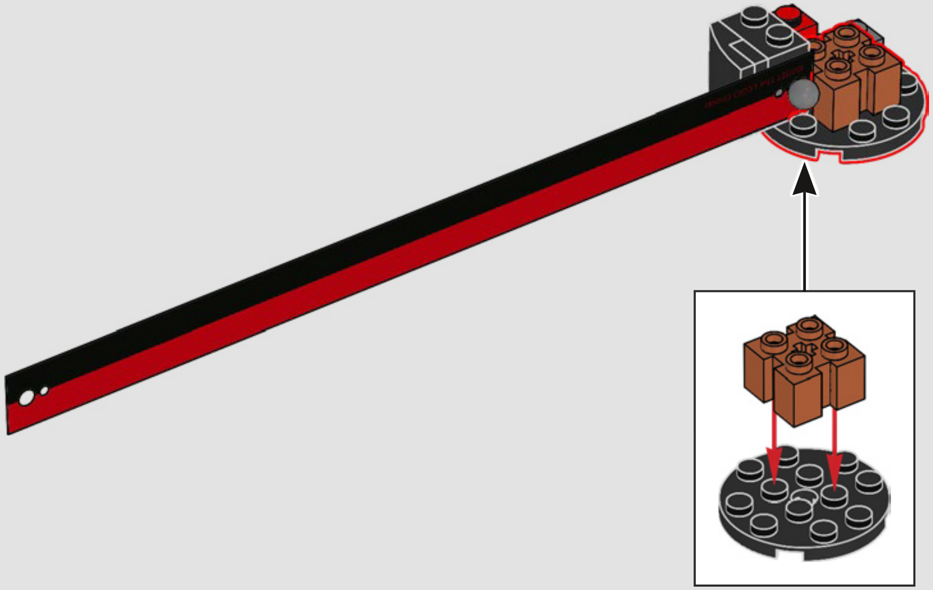

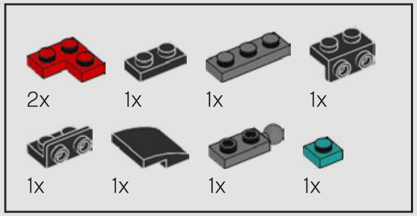
2x
1x
1x
1x
1x
1x
1x
1x

322

1

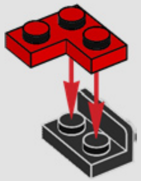

2

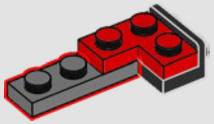

3

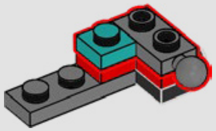

4

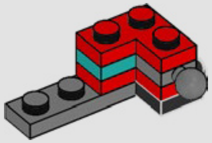

5

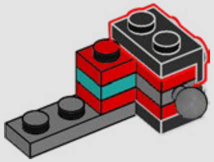

6

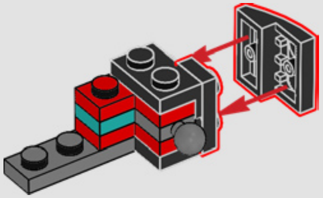

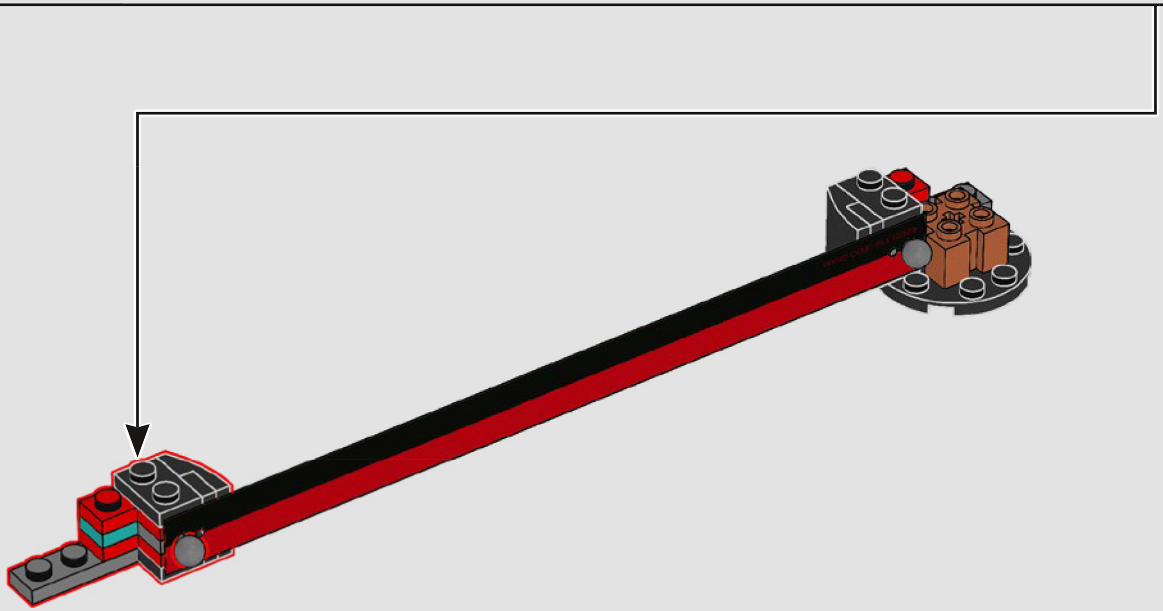

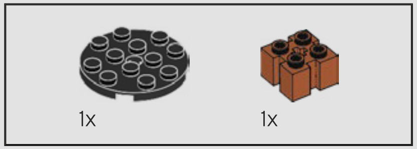

323

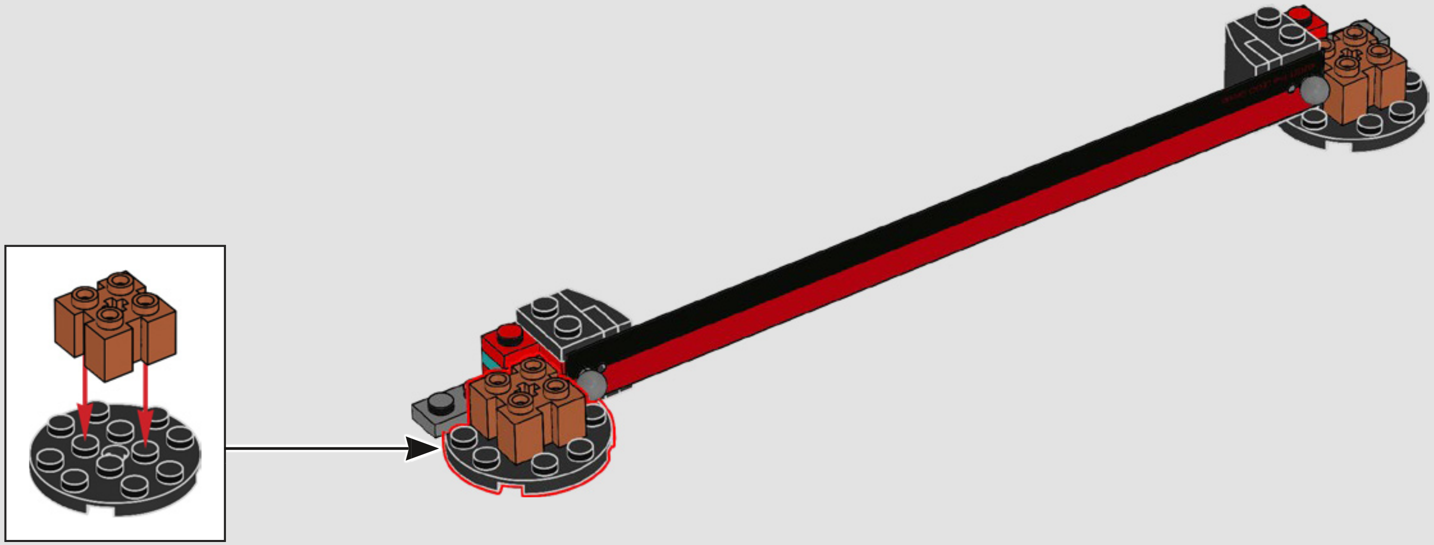

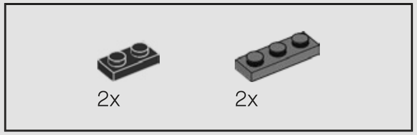

324

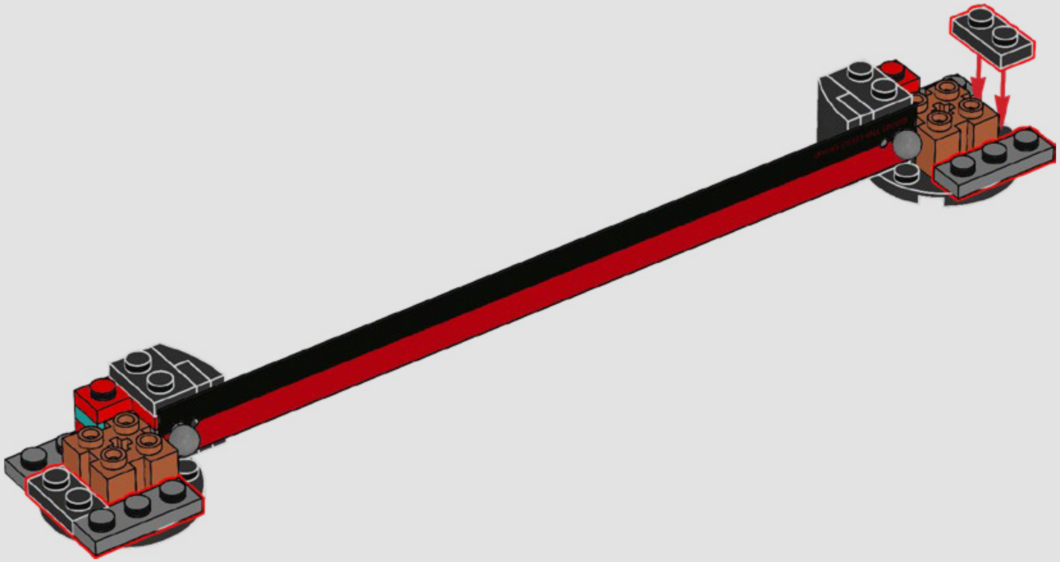

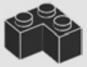

325

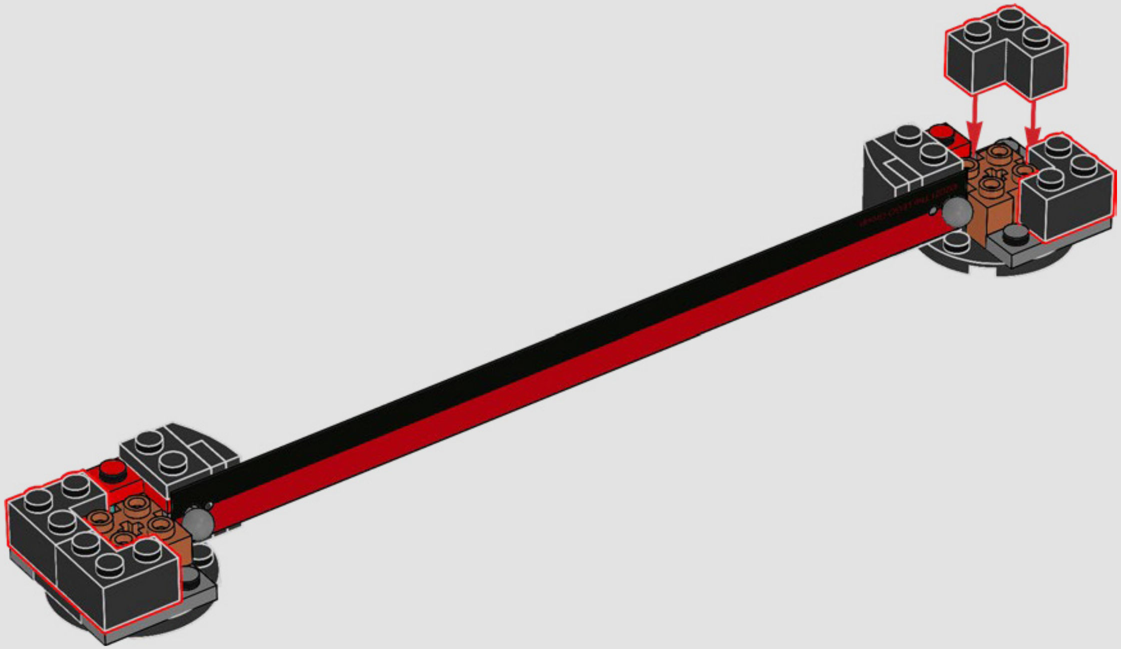

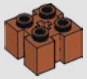

326

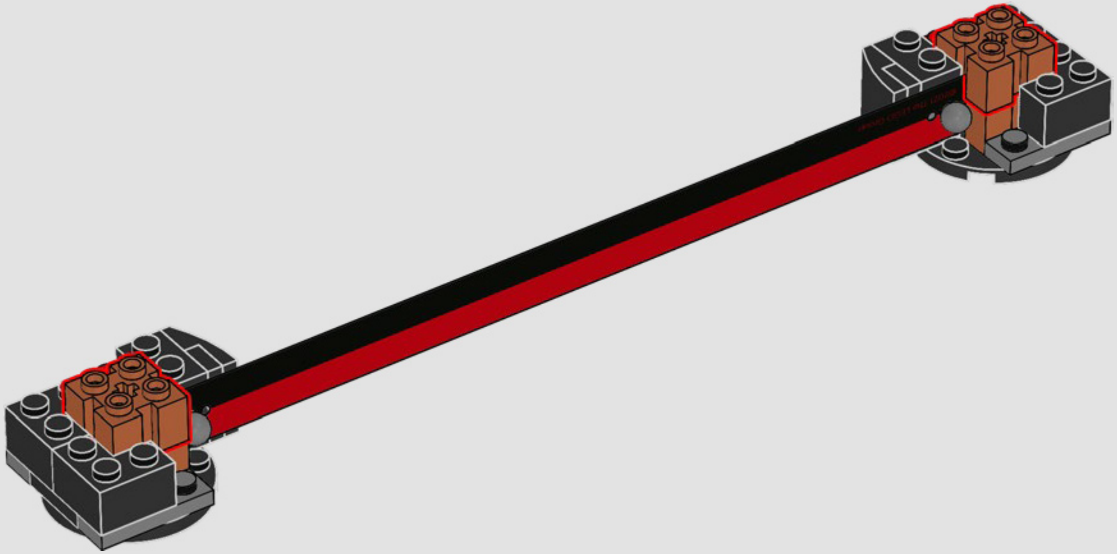

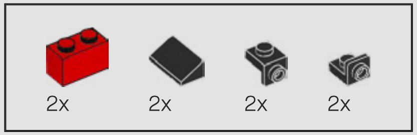

327

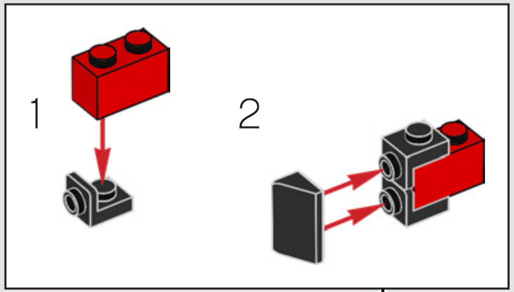

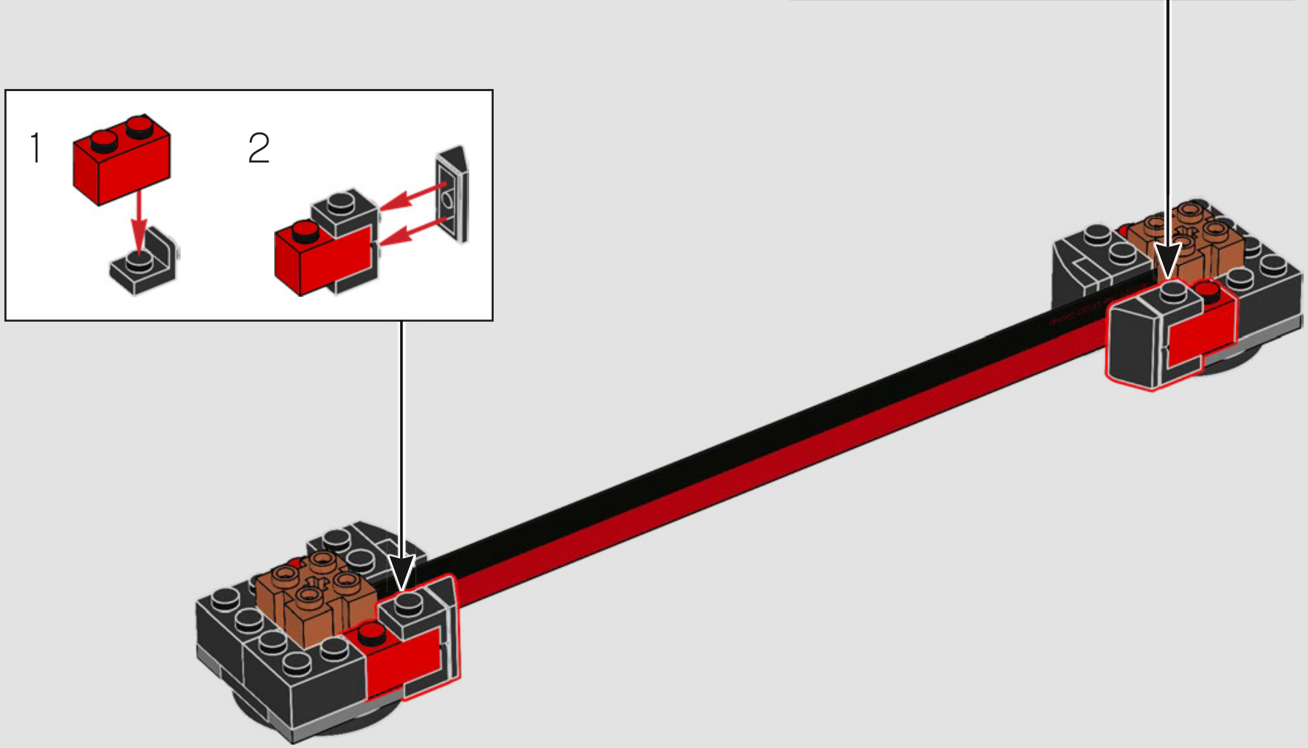

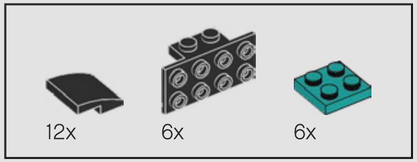

328

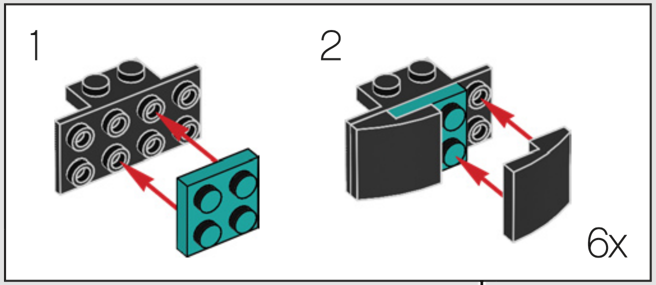

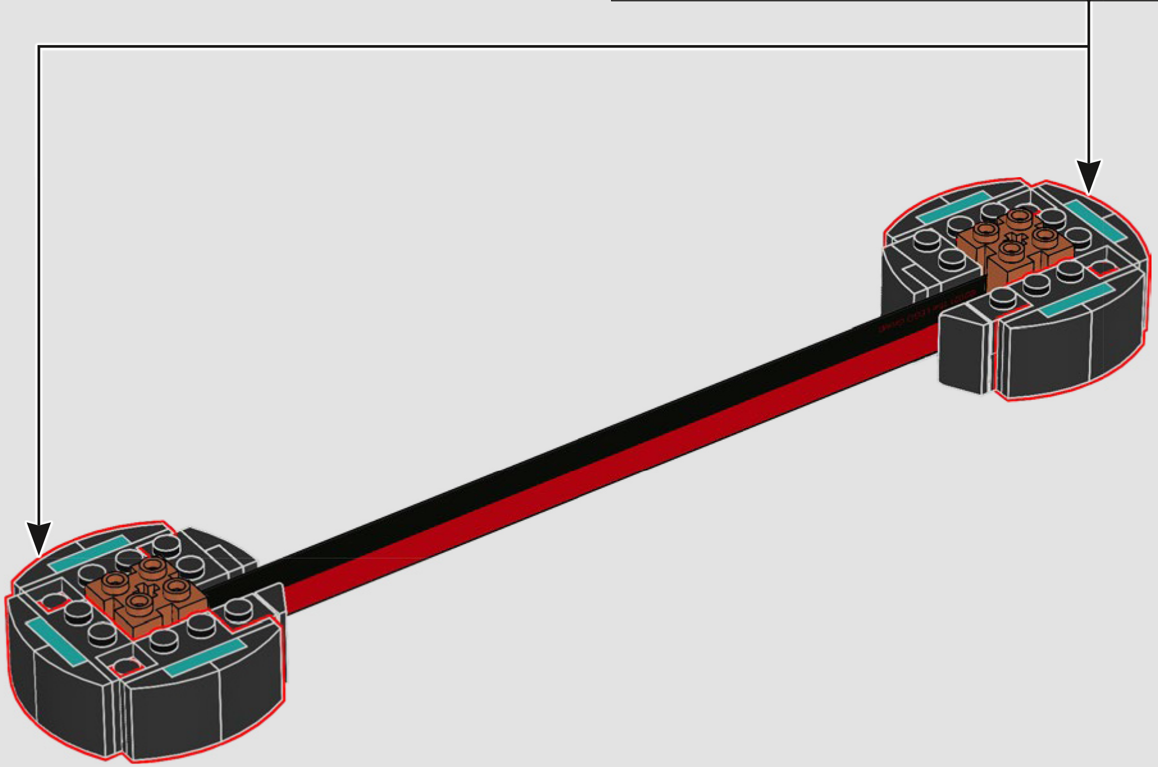

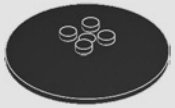
2x

329

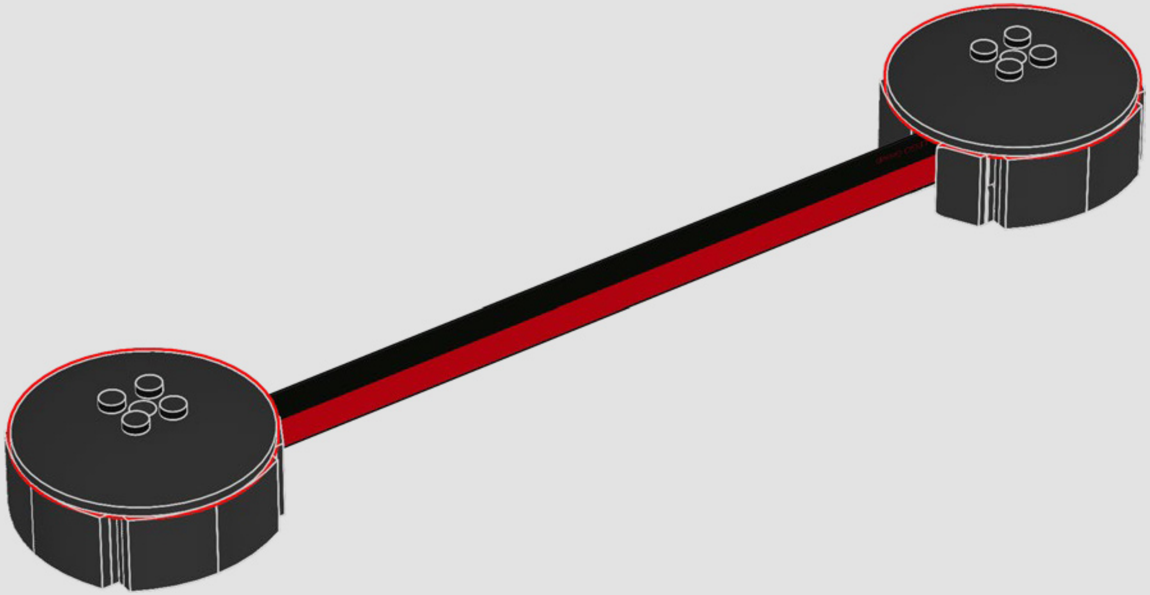

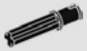

2x

330

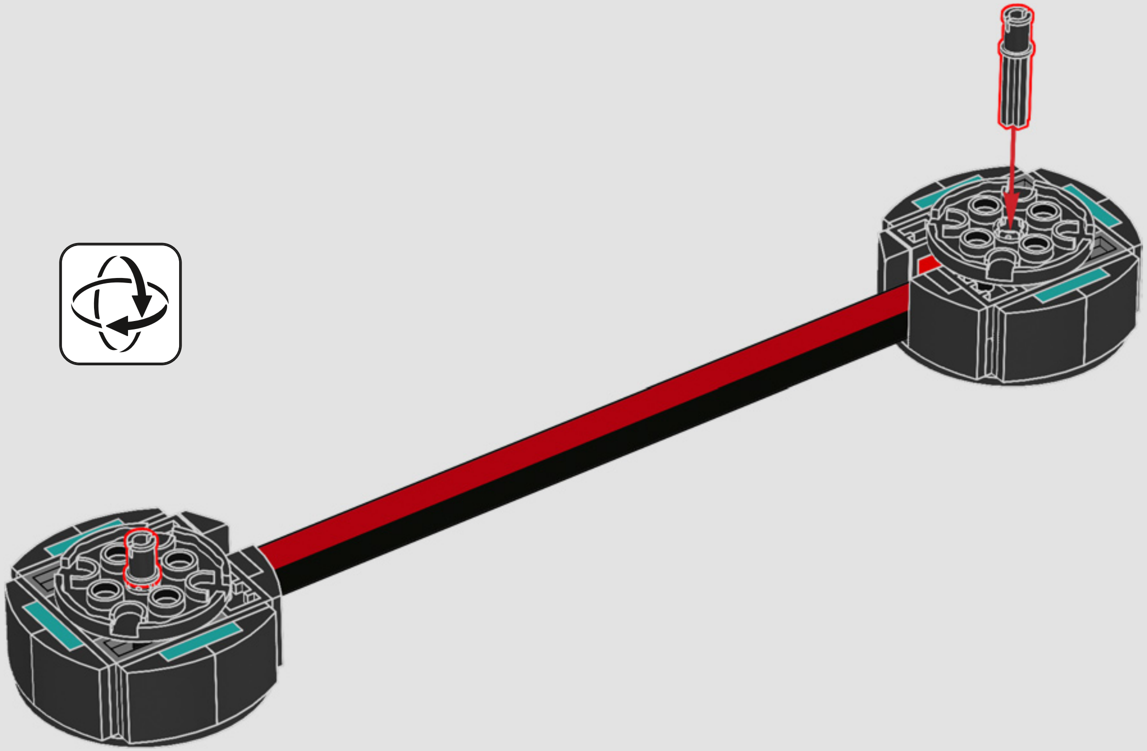

331

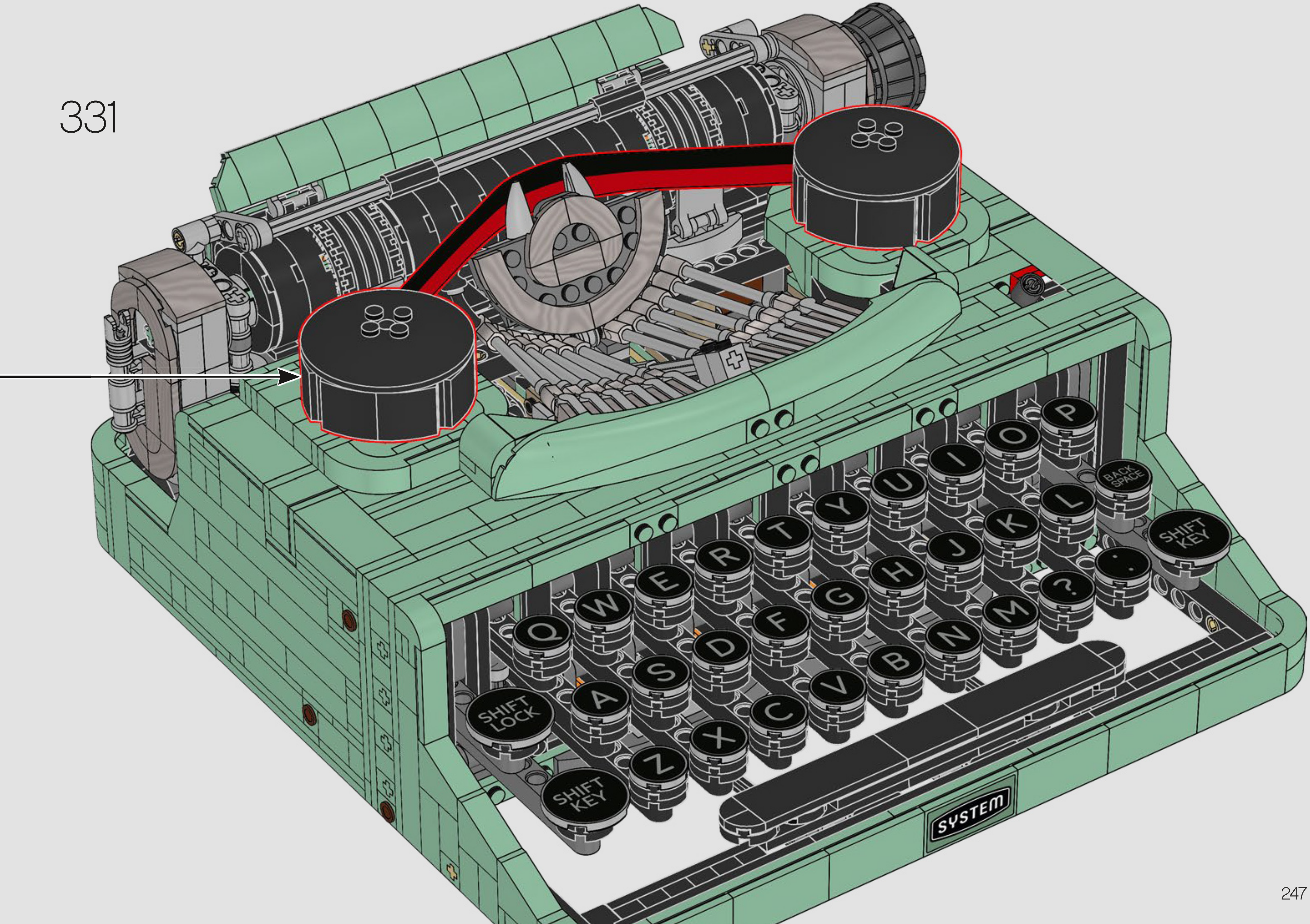
Q
W
E
R
T
Y
U
I
O
P
A
S
D
F
G
H
J
K
L
Z
X
C
V
B
N
M
?
:
SHIFT LOCK
SHIFT KEY
SHIFT KEY
BACK SPACE
SYSTEM

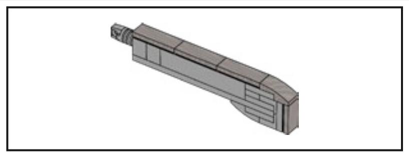

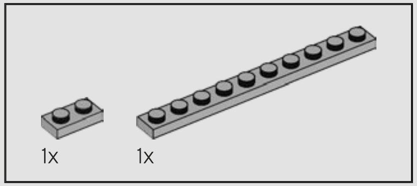

332

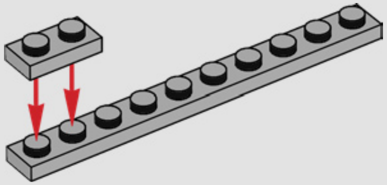

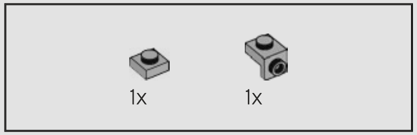

333

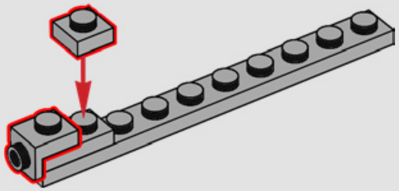

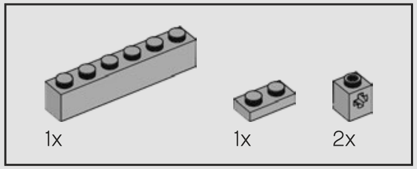

334

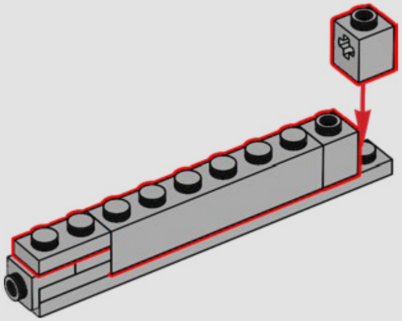

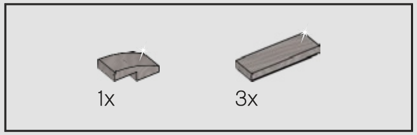

335

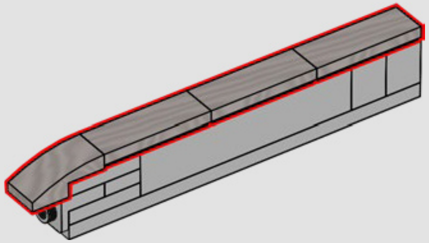

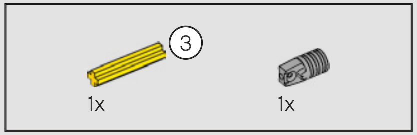

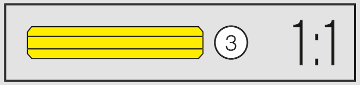

336

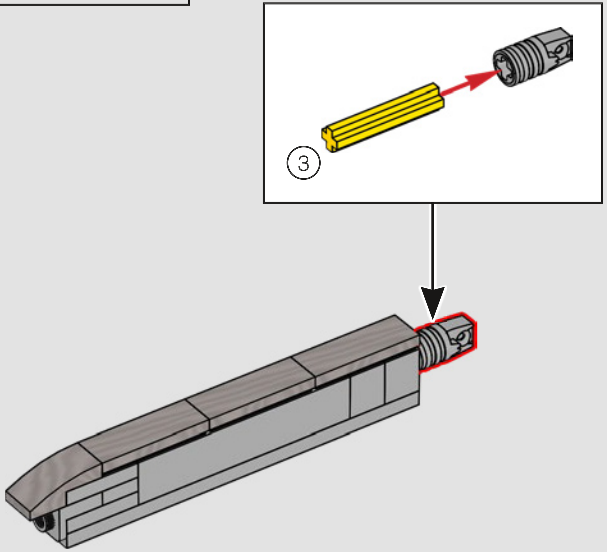

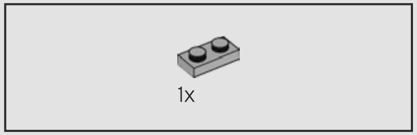

337

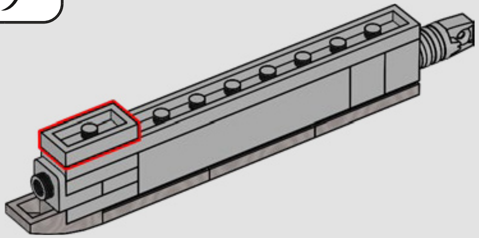

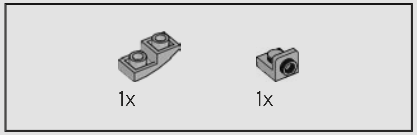

338

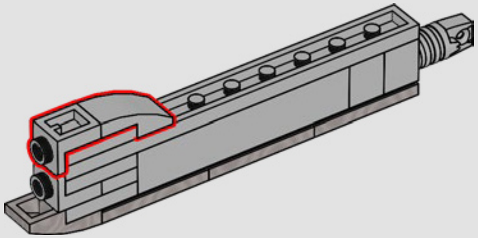

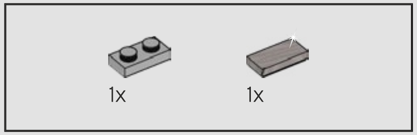

339

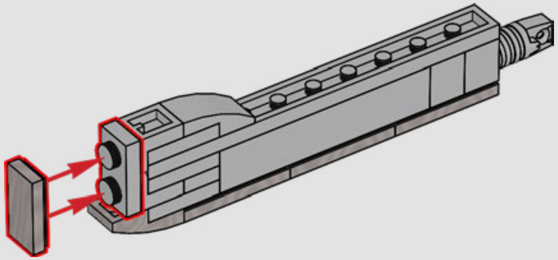

340

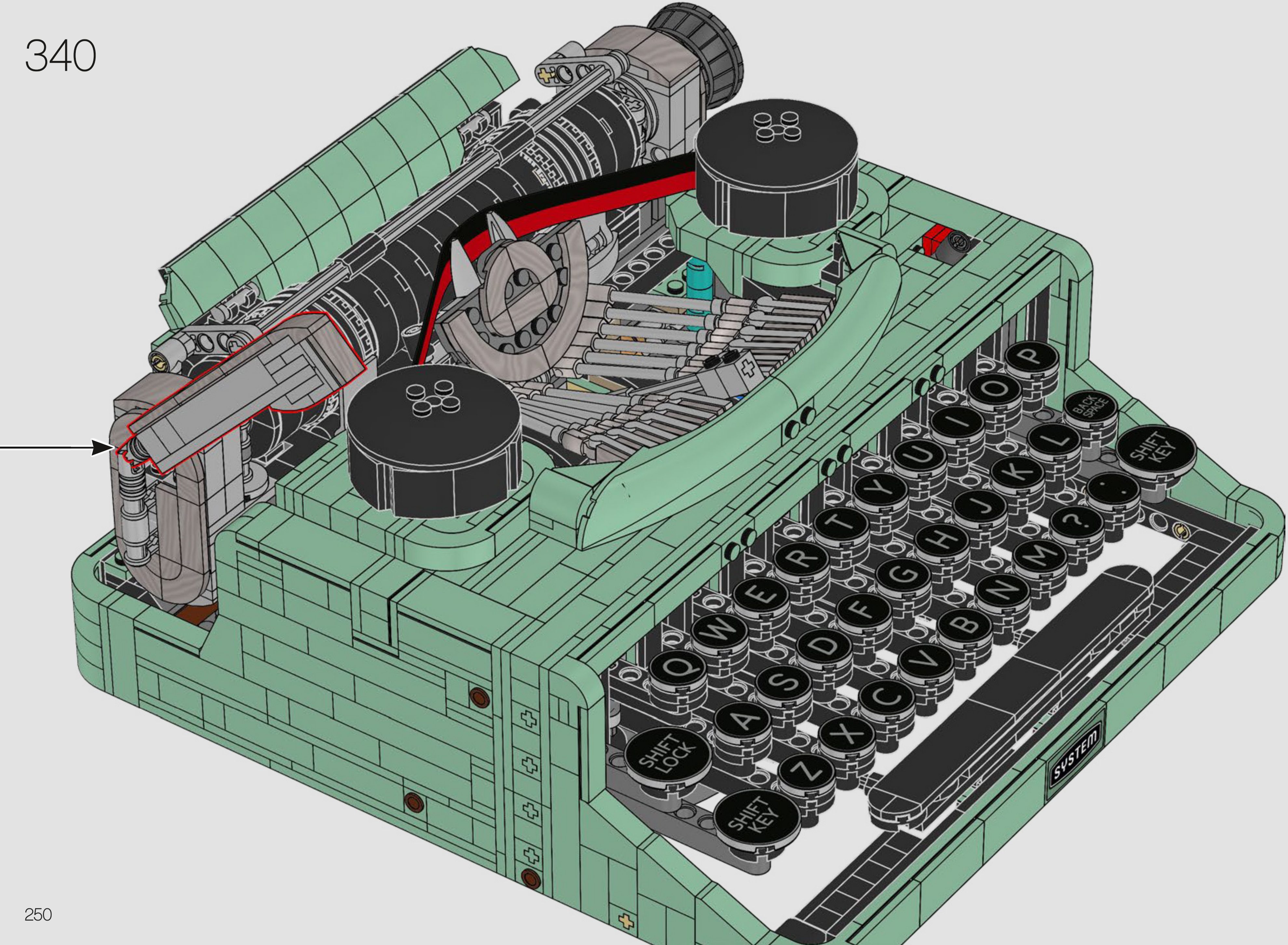
P
O
I
U
Y
T
R
E
W
Q
L
K
J
H
G
F
D
S
A
BACK SPACE
SHIFT KEY
:
?
M
N
B
V
C
X
Z
SHIFT LOCK
SHIFT KEY
SYSTEM

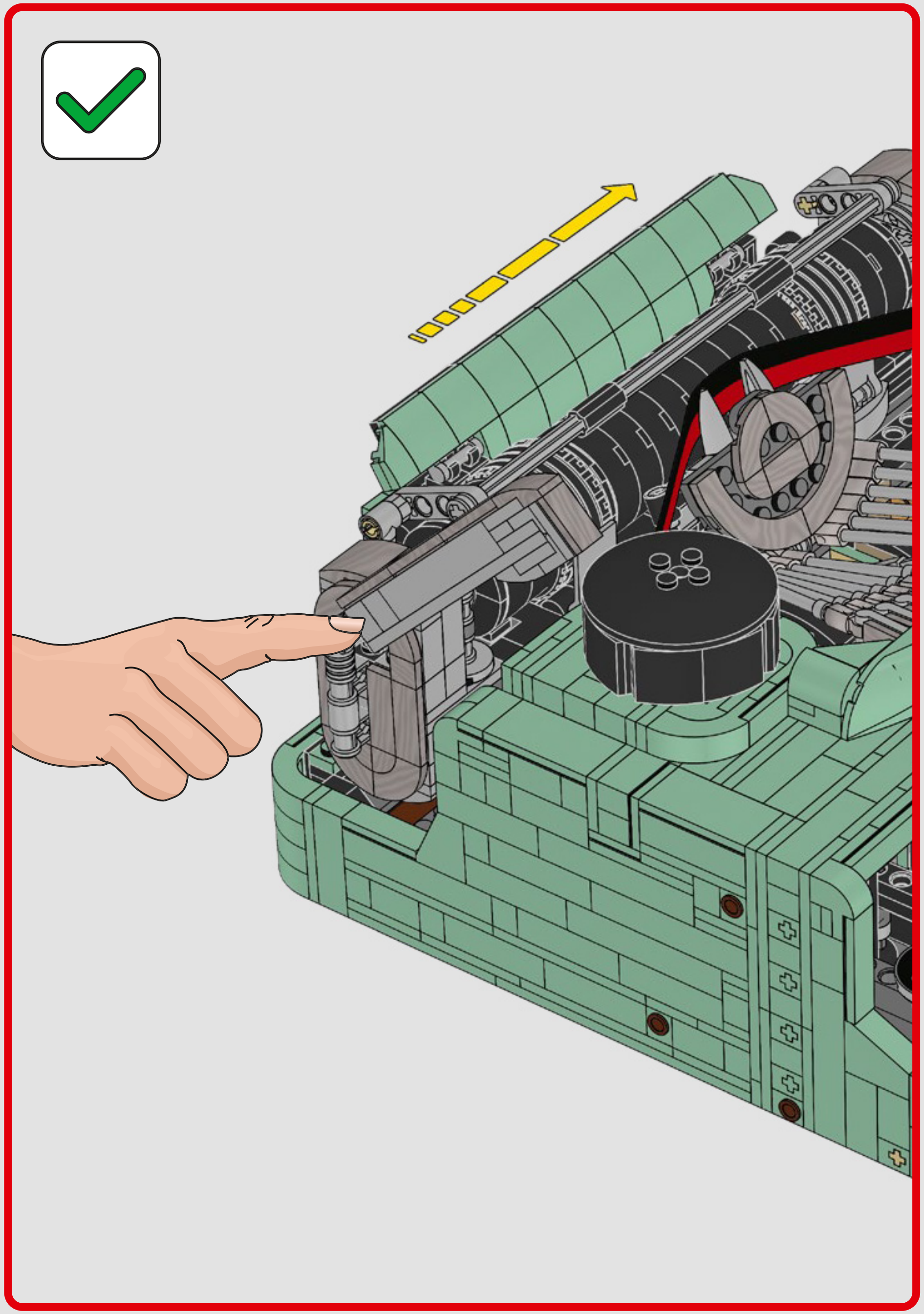
✓

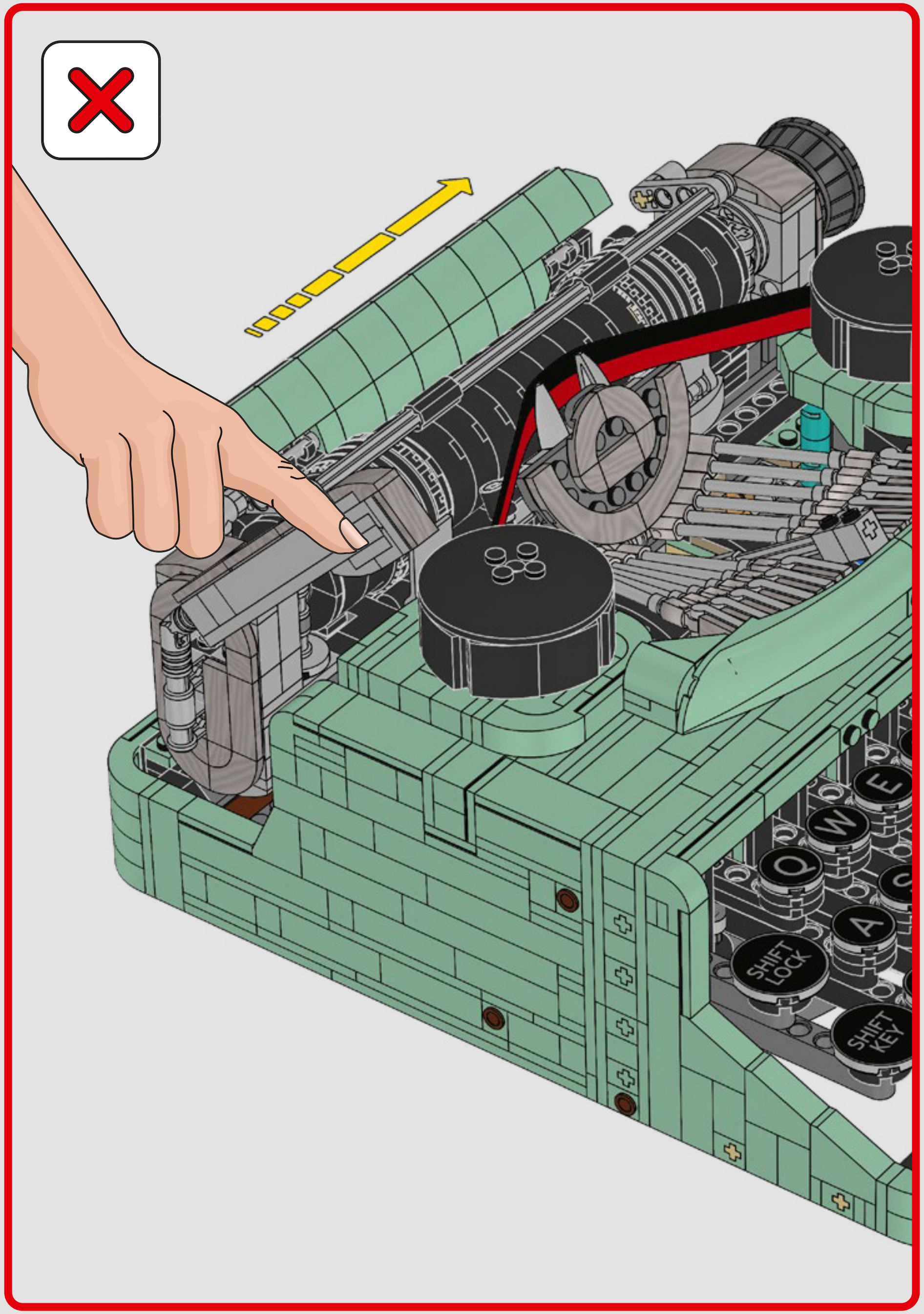
✗
E
W
Q
A
SHIFT LOCK
SHIFT KEY

LEGO
Billund, Denmark, July 2021
Dear LEGO® friend
It gives me great pleasure that this set, created by fan designer
My great-grandfather and LEGO founder, Ole
was born in 1891, just a few years
Q W E R T Y U I O P
SHIFT LOCK
A S D F G H J K L
BACK SPACE
SHIFT KEY
Z X C V B N M ? :
SHIFT KEY

GATHER SUPPORT
HOL DIR UNTERSTÜTZUNG
RASSEMBLE DES VOTES
CHIEDI DI ESSERE SUPPORTATO
GANA APOYOS
OBTÉM APOIO
SZEREZZ TÁMOGATÁST
IEGŪSTI ATBALSTU
获得更多支持

SHARE YOUR IDEA
TEILE DEINE IDEE
PARTAGE TON IDÉE
CONDIVIDI LA TUA IDEA
COMPARTE TU IDEA
PARTILHA A TUA IDEIA
TEDD KÖZZÉ AZ ÖTLETED
DALIES AR SAVU IDEJU
分享您的观点

IDEAS
EXPLORE
COMMUNITY
Find Ideas
LOG IN
How It Works
LEGO IDEAS – How It Works
IDEAS

NEW LEGO® PRODUCT
NEUES LEGO® PRODUKT
NOUVEAU PRODUIT LEGO®
NUOVO PRODOTTO LEGO®
NUEVO PRODUCTO LEGO®
NOVO PRODUTO LEGO®
ÚJ LEGO® TERMÉK
JAUNS LEGO® PRODUKTS
新的乐高®产品

LEGO® REVIEW
LEGO® PRÜFUNG
EXAMEN PAR LEGO®
REVIEW LEGO®
REVISIÓN DE LEGO®
AVALIAÇÃO LEGO®
LEGO® VÉLEMÉNYEZÉS
LEGO® RECENZIJA
乐高®评论

SESAME STREET
Medieval Blacksmith
Winnie the Pooh
Disney
IDEAS
18+ | 21324
18+ | 21325 | 2164 pcs
18+ | 21326 | 1265 pcs

Ideas.LEGO.com

Sesame Street® and associated characters, trademarks and design elements are owned and licensed by Sesame Workshop.
© 2021 Sesame Workshop. All rights reserved.

©Disney. Based on the "Winnie the Pooh" works by A.A. Milne and E.H. Shepard.

FEEDBACK AND WIN

FEEDBACK AND WIN

Your feedback will help shape the future development of this product series.

Please visit:

FEEDBACK UND GEWINNEN

Dein Feedback trägt zur Weiterentwicklung dieser Produktreihe bei.

Geh auf:

COMMENTEZ ET GAGNEZ

Vos commentaires nous aideront à concevoir les futurs produits de cette gamme.

Rendez-vous sur :

COMENTA Y GANA

Tu opinión nos ayudará a dar forma al desarrollo de esta serie de productos en el futuro.

Visita:

反馈有奖

您的反馈将有助于我们在今后改进本系列产品。

请访问：

LEGO.com/productfeedback

By completing, you will automatically enter a drawing to win a LEGO® set.

Terms & Conditions apply.

Durch Ausfüllen nimmst du automatisch an der Verlosung eines LEGO® Preises teil.

Es gelten die Teilnahmebedingungen.

En envoyant vos commentaires, vous serez automatiquement inscrit(e) à un tirage au sort qui vous permettra de remporter un prix LEGO®.

Offre soumise à conditions.

Al contestar, participarás automáticamente en el sorteo y podrás ganar un set LEGO®.

Sujeto a Términos y Condiciones.

完成我们的反馈调查，即可自动进入抽奖环节，赢取乐高®套装。

适用《条款和条件》。

LEGO and the LEGO logo are trademarks of the LEGO Group. ©2021 The LEGO Group.

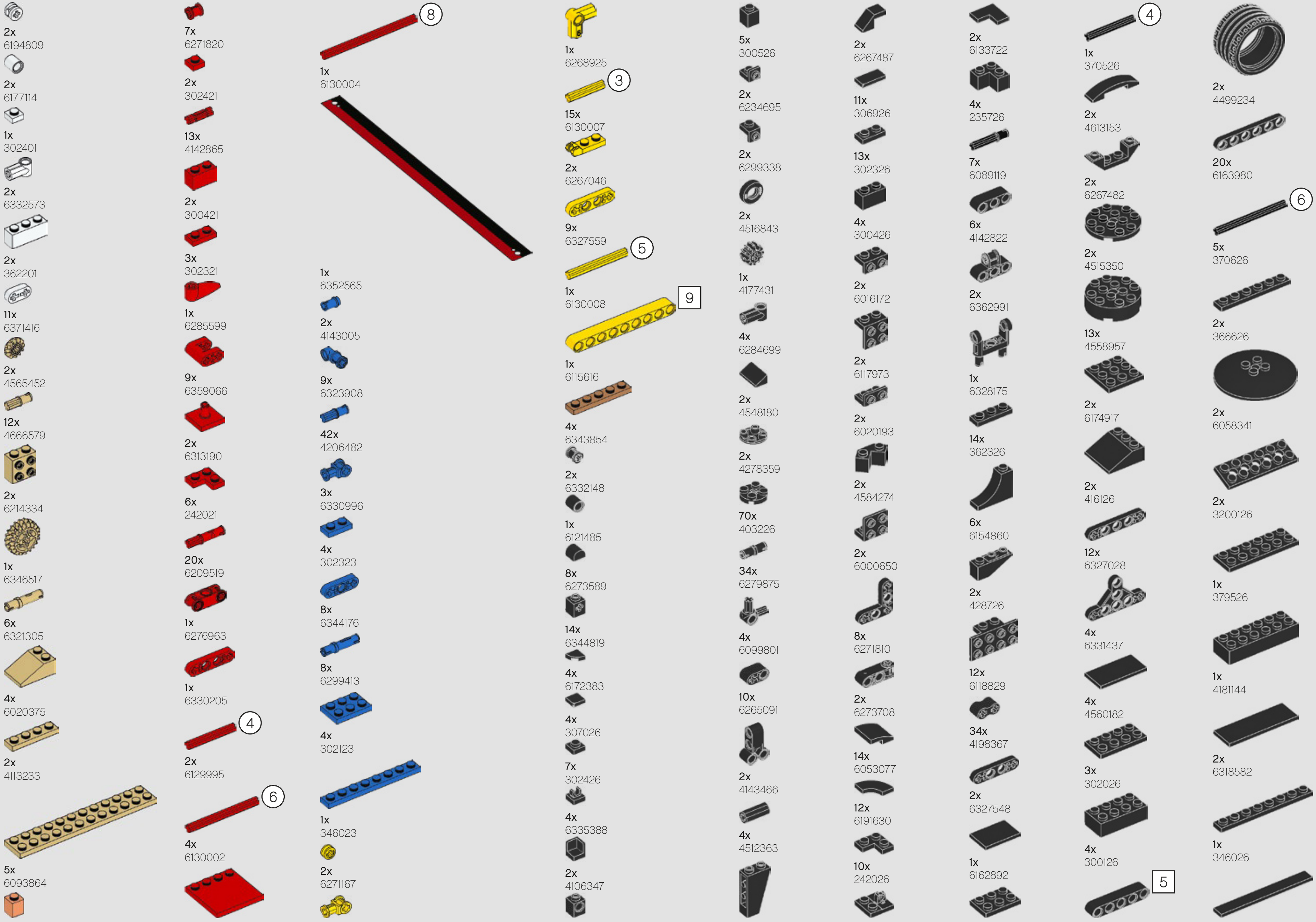

2x 6194809
2x 6177114
1x 302401
2x 6332573
2x 362201
11x 6371416
2x 4565452
12x 4666579
2x 6214334
1x 6346517
6x 6321305
4x 6020375
2x 4113233
5x 6093864
4x 6330369

7x 6271820
2x 302421
13x 4142865
2x 300421
3x 302321
1x 6285599
9x 6359066
2x 6313190
6x 242021
20x 6209519
1x 6276963
1x 6330205
2x 6129995
4x 6130002
2x 4616342

1x 6130004
1x 6352565
2x 4143005
9x 6323908
42x 4206482
3x 6330996
4x 302323
8x 6344176
8x 6299413
4x 302123
1x 346023
2x 6271167
2x 4107800

1x 6268925
15x 6130007
2x 6267046
9x 6327559
1x 6130008
1x 6115616
4x 6343854
2x 6332148
1x 6121485
8x 6273589
14x 6344819
4x 6172383
4x 307026
7x 302426
4x 6335388
2x 4106347
8x 654126

5x 300526
2x 6234695
2x 6299338
2x 4516843
1x 4177431
4x 6284699
2x 4548180
2x 4278359
70x 403226
34x 6279875
4x 6099801
10x 6265091
2x 4143466
4x 4512363
2x 4636202

2x 6267487
11x 306926
13x 302326
4x 300426
2x 6016172
2x 6117973
2x 6020193
2x 4584274
2x 6000650
8x 6271810
2x 6273708
14x 6053077
12x 6191630
10x 242026
2x 6265730

2x 6133722
4x 235726
7x 6089119
6x 4142822
2x 6362991
1x 6328175
14x 362326
6x 6154860
2x 428726
12x 6118829
34x 4198367
2x 6327548
1x 6162892
5x 302126

1x 370526
2x 4613153
2x 6267482
2x 4515350
13x 4558957
2x 6174917
2x 416126
12x 6327028
4x 6331437
4x 4560182
3x 302026
4x 300126
3x 4142135

2x 4499234
20x 6163980
5x 370626
2x 366626
2x 6058341
2x 3200126
1x 379526
1x 4181144
2x 6318582
1x 346026
2x 416226

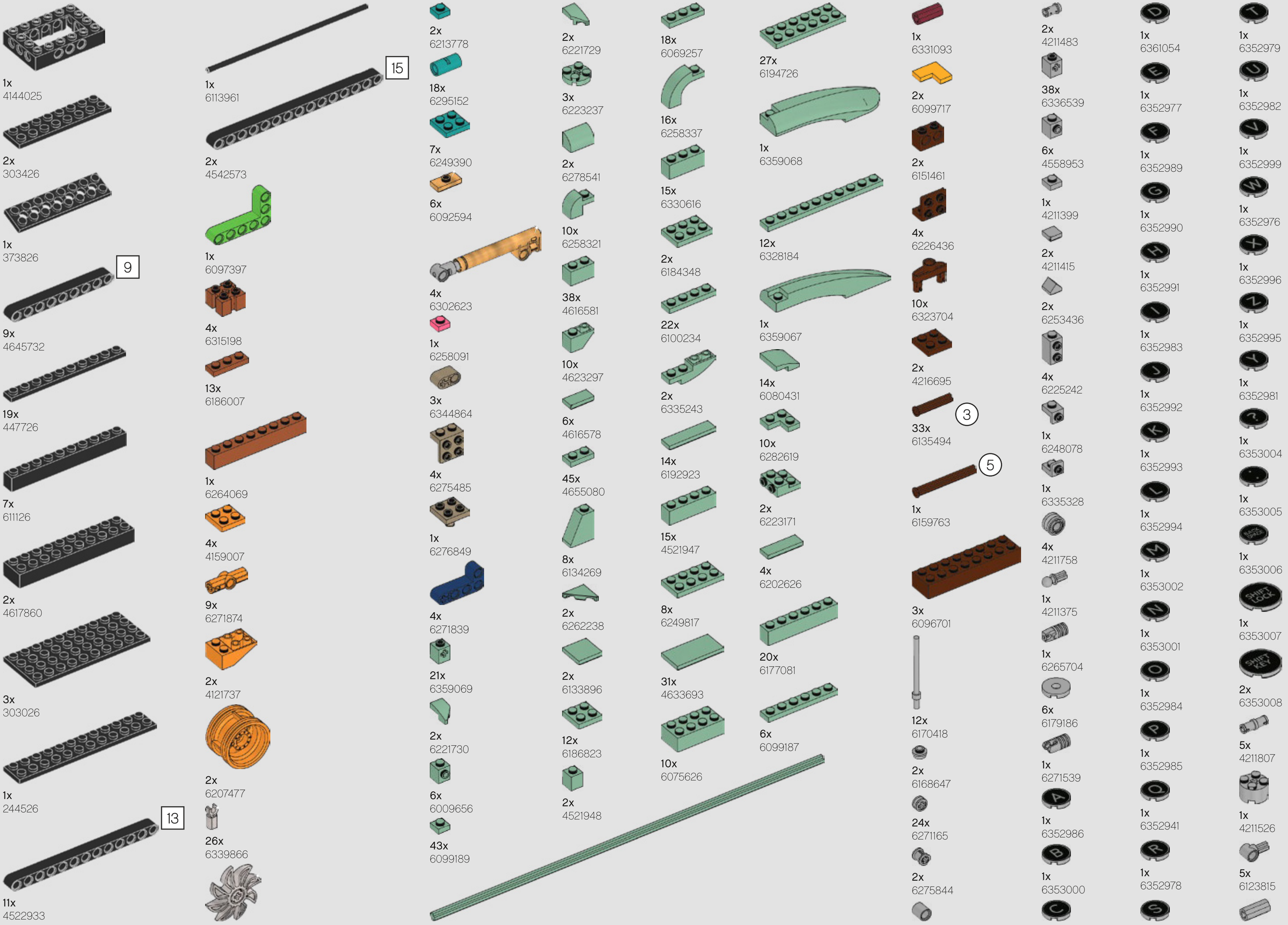

1x
4144025

2x
303426

1x
373826

9x
4645732

19x
447726

7x
611126

2x
4617860

3x
303026

1x
244526

11x
4522933

1x
6113961

2x
4542573

1x
6097397

4x
6315198

13x
6186007

1x
6264069

4x
4159007

9x
6271874

2x
4121737

2x
6207477

26x
6339866

1x
6289758

2x
6213778

18x
6295152

7x
6249390

6x
6092594

4x
6302623

1x
6258091

3x
6344864

4x
6275485

1x
6276849

4x
6271839

21x
6359069

2x
6221730

6x
6009656

43x
6099189

5x
6329299

2x
6221729

3x
6223237

2x
6278541

10x
6258321

38x
4616581

10x
4623297

6x
4616578

45x
4655080

8x
6134269

2x
6262238

2x
6133896

12x
6186823

2x
4521948

18x
6069257

16x
6258337

15x
6330616

2x
6184348

22x
6100234

2x
6335243

14x
6192923

15x
4521947

8x
6249817

31x
4633693

10x
6075626

27x
6194726

1x
6359068

12x
6328184

1x
6359067

14x
6080431

10x
6282619

2x
6223171

4x
6202626

20x
6177081

6x
6099187

1x
6331093

2x
6099717

2x
6151461

4x
6226436

10x
6323704

2x
4216695

33x
6135494

1x
6159763

3x
6096701

12x
6170418

2x
6168647

24x
6271165

2x
6275844

1x
6183784

2x
4211483

38x
6336539

6x
4558953

1x
4211399

2x
4211415

2x
6253436

4x
6225242

1x
6248078

1x
6335328

4x
4211758

1x
4211375

1x
6265704

6x
6179186

1x
6271539

1x
6352986

1x
6353000

1x
6352997

1x
6361054

1x
6352977

1x
6352989

1x
6352990

1x
6352991

1x
6352983

1x
6352992

1x
6352993

1x
6352994

1x
6353002

1x
6353001

1x
6352984

1x
6352985

1x
6352941

1x
6352978

1x
6352987

1x
6352979

1x
6352982

1x
6352999

1x
6352976

1x
6352996

1x
6352995

1x
6352981

1x
6353004

1x
6353005

1x
6353006

1x
6353007

2x
6353008

5x
4211807

1x
4211526

5x
6123815

1x
4512360

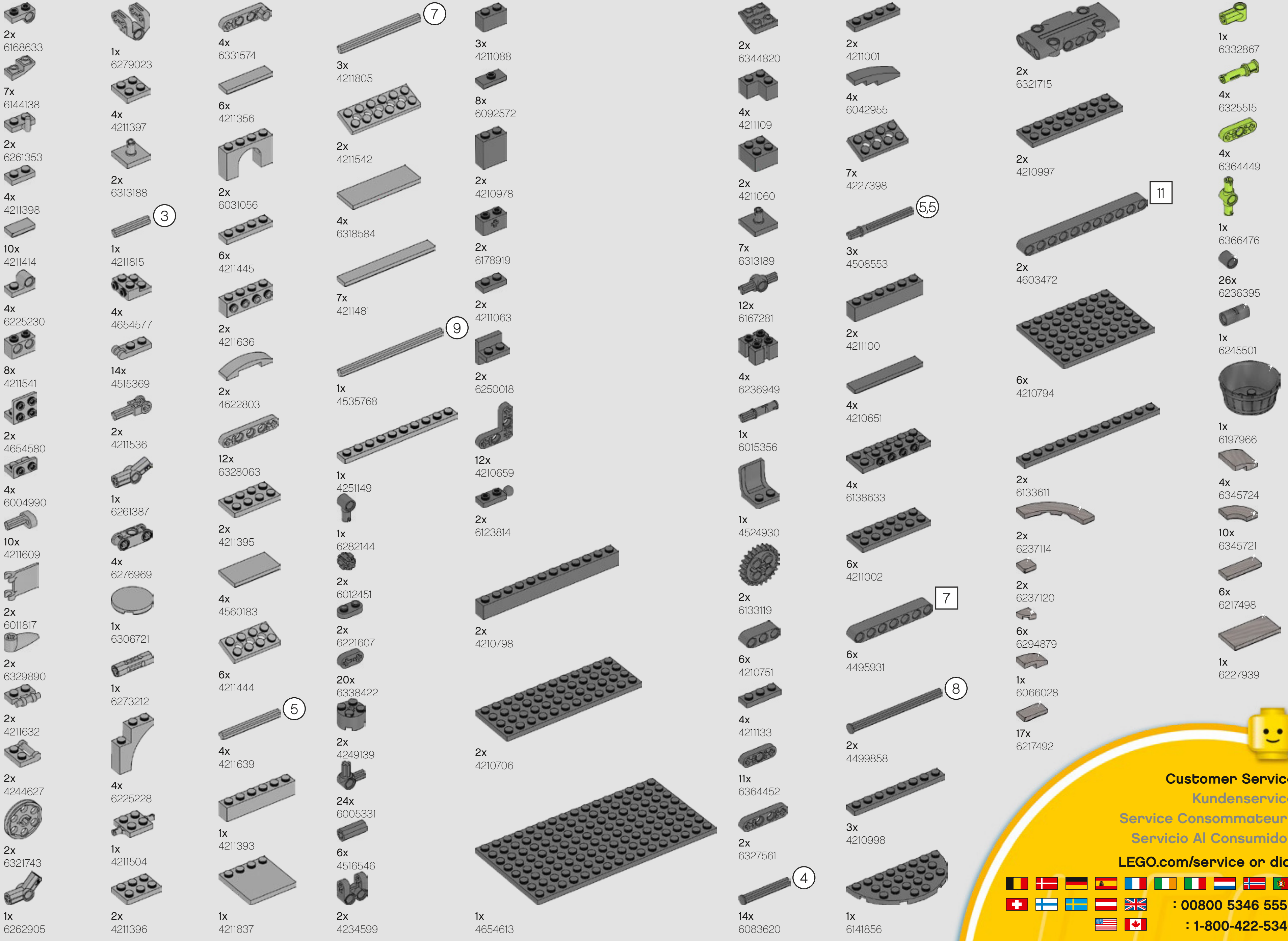

2x 6168633
7x 6144138
2x 6261353
4x 4211398
10x 4211414
4x 6225230
8x 4211541
2x 4654580
4x 6004990
10x 4211609
2x 6011817
2x 6329890
2x 4211632
2x 4244627
2x 6321743
1x 6262905

1x 6279023
4x 4211397
2x 6313188
1x 4211815
4x 4654577
14x 4515369
2x 4211536
1x 6261387
4x 6276969
1x 6306721
1x 6273212
4x 6225228
1x 4211504
2x 4211396

4x 6331574
6x 4211356
2x 6031056
6x 4211445
2x 4211636
2x 4622803
12x 6328063
2x 4211395
4x 4560183
6x 4211444
4x 4211639
1x 4211393
1x 4211837

3x 4211805
2x 4211542
4x 6318584
7x 4211481
1x 4535768
1x 4251149
1x 6282144
2x 6012451
2x 6221607
20x 6338422
2x 4249139
24x 6005331
6x 4516546
2x 4234599

3x 4211088
8x 6092572
2x 4210978
2x 6178919
2x 4211063
2x 6250018
12x 4210659
2x 6123814
2x 4210798
2x 4210706
1x 4654613

2x 6344820
4x 4211109
2x 4211060
7x 6313189
12x 6167281
4x 6236949
1x 6015356
1x 4524930
2x 6133119
6x 4210751
4x 4211133
11x 6364452
2x 6327561
14x 6083620

2x 4211001
4x 6042955
7x 4227398
3x 4508553
2x 4211100
4x 4210651
4x 6138633
6x 4211002
6x 4495931
2x 4499858
3x 4210998
1x 6141856

2x 6321715
2x 4210997
2x 4603472
6x 4210794
2x 6133611
2x 6237114
2x 6237120
6x 6294879
1x 6066028
17x 6217492

1x 6332867
4x 6325515
4x 6364449
1x 6366476
26x 6236395
1x 6245501
1x 6197966
4x 6345724
10x 6345721
6x 6217498
1x 6227939

Customer Service
Kundenservice
Service Consommateurs
Servicio Al Consumidor
LEGO.com/service or dial
: 00800 5346 5555
: 1-800-422-5346

6377456